INDEX

AI	Base
A2,A3	Covers
A4	Guards
A5	Collecting Tray
A6,A7	Vacuum Pump and Motors
B1	Air and Vacuum Pipes
B2,63	Drive Motor
B4	Feeder Side Frames
B5,B6,137,C1, C2,C3,C4	Feeder Mechanism
05,C6	Feeder Mounting Block and 4 Sucker System
07 -	Printer Side Frames
DI ,D2,D3,D4	Printer Link L.H. Side
D5,D6,D7	Printer
EI,E2	Impre-¯'-n Cylinder
E3	Pre ´n Mechanism
E4	Blan,
E5,E6,E7	Blanket Cledii,..,,
FI ,F2	Blanket Cleaning
F3,F4	Plate Cylinder
F5	Delivery Jogger and Roller Assembly
F6	Delivery Cylinder
F7,G1	Top Conveyor
G2,G3	Conveyor
G4,G5,G6,H1	Water Unit
H2,H3,H4,I-15, H6,H7	Inker
J3	Control Panel
J5	Light and Junction Box
J7	Wiring Harness
K1	Special Accessories
K4,K5	Magazine Feed
K6	Air and Vacuum Pipes with Blow Dry
K7	Tools
L1 ,L2,L3	Improved Air and Vacuum System
L4,L5,L6,L7	Feeder and Conveyor - Improved Registration
M1 ,M2,M3, M4,M5	List of Changes from last issue

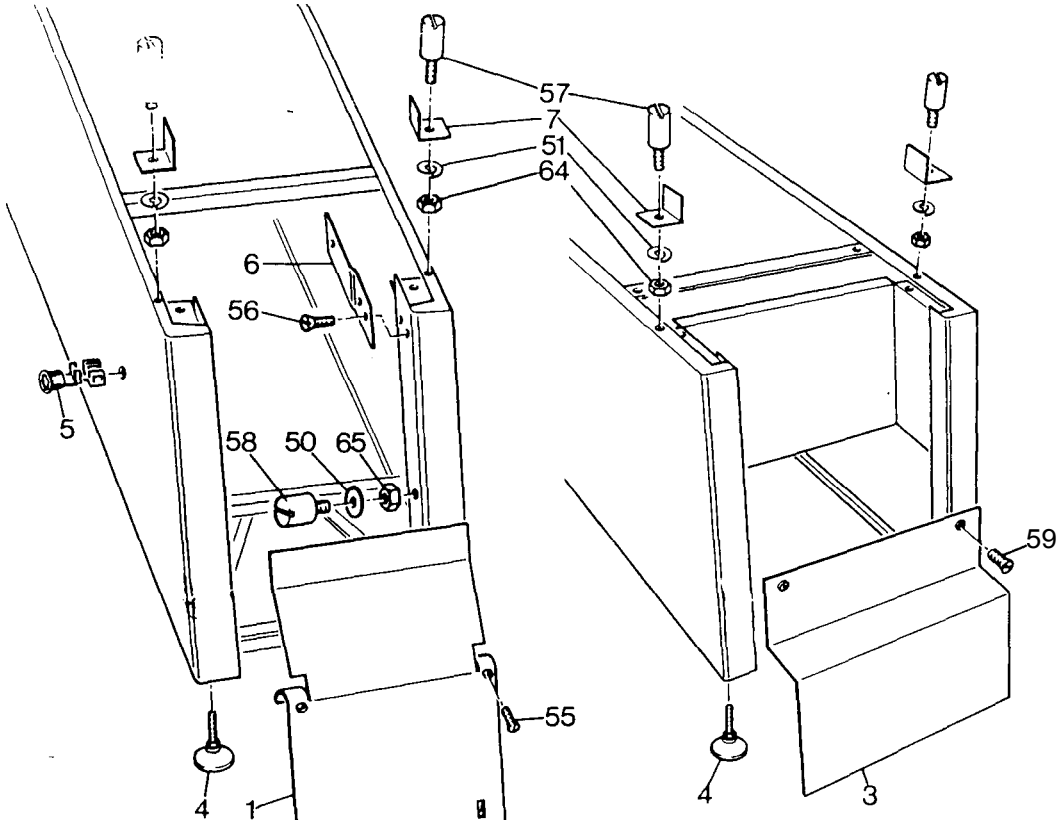

Index No.	Pa7i Ni		Equal to	Part	Serial Ni
• 1	E14N153			Cover	
• 2	E14S065			Base -complete	
• 3	E14N156			Cover	
4	F14A001			Foot	
5	F14A002			Strain Relief	
6	F14A003		238	Collecting-Tray Support	
7	F14A004		88	Guide Bracket for Lower Cover -	

* 313 Parts

50	LOOR007	(25)	0R7	Washer	
51	LOOR020	(10)	0R20	Spring Washer	
55	LOHS231	~~(5)~~	~~+16231~~	Screw	M4 x 16mm
56	L00S077	(10)	0S77	Screw	10-24 UNC x 1/4in long
57	L00S267	(5)	0S267	Screw	
58	P14S057	(5)		Stud	
59	L005379	(10)	C5379	Screw	8-32 UNC x 5/16in long
64	LOHT052	(10)	H152	Nut	10-24 UNC
65	LOOT002	(25)	012	Nut	5/16in - 18 UNC
70	L05E288	(5)		Air Pressure Label	
71	L05E289	(5)		Vacuum Label	
72	105E323	(5)		Air and Vacuum Label (French)	
73	L05E402	(5)		Approval Label (French)	
74	M14W007	(5)	3029W1	Label 10r3	
75	P14S103	(5)		Plug for 2	

70

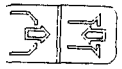

71

72

73

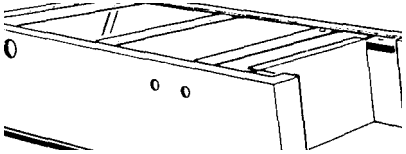

17

74

75

2

Al

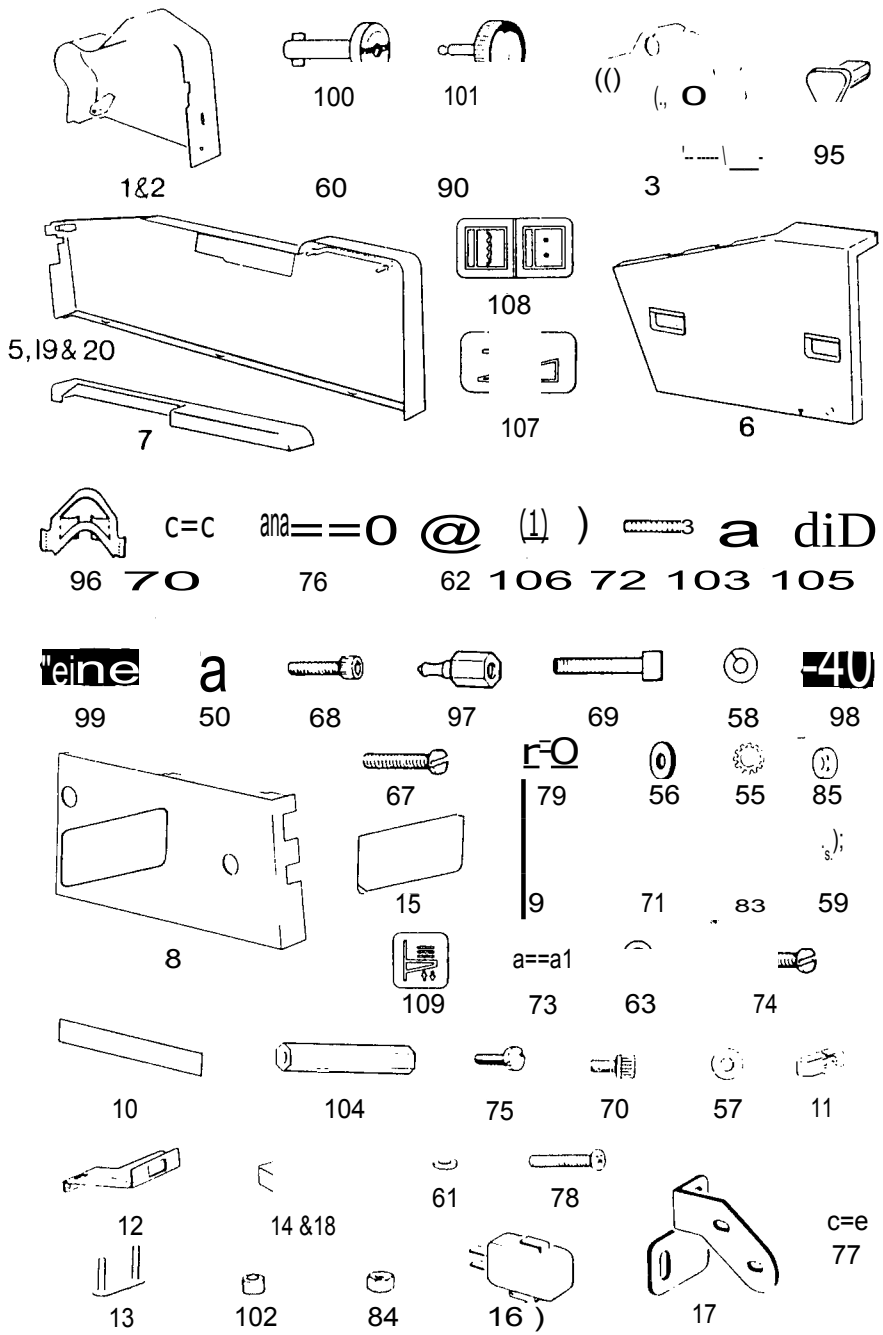

Index No.	Part No.	Equal to	Part
1	E14N148		Printer Cover Upper R.H.
2	E14N305		Printer Cover Upper Fl.11 (External Water Bottle M/C's)
3	E14N096		Printer Cover Upper L.H. - complete with 9
* 5	E14N172		Printer Cover Lower R.N.
6	E14N093		Printer Cover Lower R.H. - complete with 95
7	E14N057		Control Panel Cover
8	E14N200		Feeder Cover L.H. - complete with 15
9	F14A006	AU028	Door Magnet tor 8
10	E05E312		Name Plate 313 for 8
11	F14A007	A13P	Locking Insert for 100
12	E14R175		Bracket for 11 and 13
13	E14R154		Bracket for 14
14	F14A008		Microswitch for 1,3 and 6
15	E14N140		Door for 8
16	F14A011		Microswitch for 15
17	E14N146		Bracket for 16
18	F14J007		Microswitch for 3
19	E14N248		Printer Cover Lower - R.H. (Rec.B/Wash Mica)
20	E14N250		Printer Cover Lower - R.H. (Rec.BNVash and CPD Mica)

Ser o.

e

A2

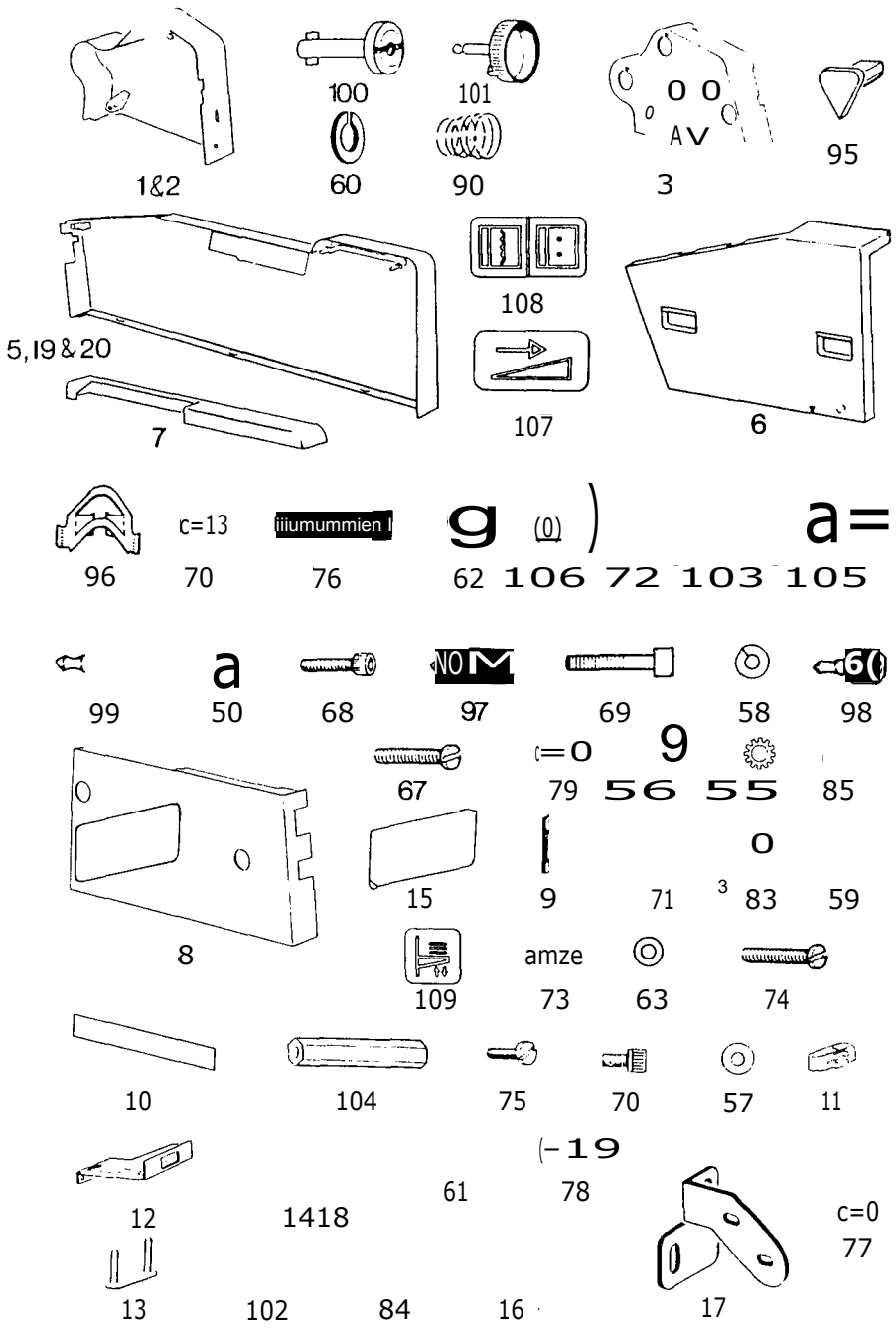

Index No.	Part No.		Equal to	Part	ii No.
50	M14N001	(25)		Spring Clip for 99	
55	LOCR145	(25)	CR145	Lock Washer for 85	
56	LOOR015	(10)	0R15	Washer for 85	
57	LOLR022	(10)	LR22	Washer for 70	
58	LOCR134	(25)	CR134	Spring Washer for 69	
59	L02A025	(25)		Washer for 83	
60	LOHW122	(4)	HW122	Spring Washer for 90	
61	LOLF1008	(25)	LR8	Washer for 84	
62	L02A075	(25)	802A075K99	Washer for 76	
63	L00R025	(10)	01125	Washer for 73	
67	M14A002	(5)		Screw for 97	1/4in -20 UNC x lin long
68	L00S034	(10)	0S34	Screw for 98 & 99	1/4in - 20 UNC x 3/4in long
69	L00S036	(10)	0S36	Screw for 98	1/41n -20 UNC x 1in long
70	LOOS004	(25)	OST	Screw for 5 & 12	8-32 UNC x 1/2in long
71	LOOS115	(10)	0S115	Screw for 9 & 15	6-32 UNC x 3/8Th long
72	M14A007	(10)		Screw for 7	10-24 UNC x 1/2in long
73	LOOS015	(25)	0S15	Screw for 8	10-24 UNC x 1/2In long
74	M14A010	(10)		Screw for 8	10-24 UNC x 1in long
75	LOCS407	(10)	C5407	Screw for 104	8-32 UNC x 3/8in long
76	LOOS020	(10)	0S20	Screw for 7	1-24 UNC x 1.1/2in long
77	LOOS120	(10)	0S120	Screw for 17	10-24 UNC x 3/Bin long
78	M14A003	(5)		Screw tor 16	4-40 UNC x 3/4in long
79	M14A008	(10)		Screw for 15	6-32 UNC x 3/Bin long
83	LODT001	(25)	DTI	Nut for 7	16-32 UNC
84	LOCT072	(25)	C172	Nut for 13 & 78	4-40 UNC
85	LOOT030	(10)	0130	Nut for 79	6-32 UNC
90	LOHU004	(4)	HU4	Spring tor 101	
95	LOOW050	(10)	0W50	Position Indicator for 3,4 and 6	
96	P14N204	(10)		Latch for 1,3,5 and 6	
97	P14N098	(3)		Stud for 1 and 3	
98	LOOW111	(3)	OW111	Stud for 1,3"and 6	
99	P10E010	(3)	910E010F99	Stud for 5	
100	LOLW017	(4)	LW17	Lock Stud for 1,3 and 6	
101	LOHW117	(4)	HW117	Lock Cap for 100	
102	L02J136	(10)		Spacer for 14	
103	P14N072	(10)		Spacer for 72 and 76	
104	P14N145	(5)		Door Switch Arm for 15	
105	L0CW877	(4)	CW877	Spacer for 72	
106	L02J140 •	(5)		Spacer for 76	
107	LOS E322	(5)		Speed Adjustment Label (French)	
108	L05E321	(5)		Water and Ink Lever Label (French)	
109	L05E320	(5)		Feeder Label (French)	

A3

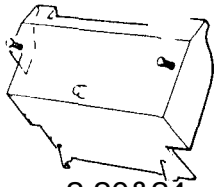

2,20&24 50 79 87 86 88

3 4 53 63 5 64 6 84

cza2 © 65 54 72 7 821 89 9 93 66 91 9 Giz) 57 69 70

54 72 12 56 13 55 67

90 51 68 15 53 61 11 54 72

\LD 14 22

t= j a

16 85 52 60 17 54 72

15

188 23 19 78 85 62 92

A4

Index No.	Part No.	Equal to	Part	Serial No.
• 2	E14N193		Back Guard - complete with 50,79, 86,87 and 88 (Non - Rec/B.Wash)	
3	E148171		Box - L.H. for 2	
4	E148172		Box - R.H. for 2	
5	E14R170		Lid for 3 and 4	
6	F14A012		Microswitch for 3 and 4	
7	F14A007	A13P	Locking Insert for 3 and 4	
• 8	E14N192		Ink Water Guard - complete (Tinted)	
9	E148160		Pivot Plate - L.H. tor 8 and 10	
10	E148164		Mounting Plate for 9	
11	F14A010		Microswitch for 10 and 15- L.H. side	
12	E148161		Pivot Plate - R.H. for 8	
13	E14N059		Pivot Plate for 14	
14	E14N189		Printer Guard - complete with 13,51, 55,67,68,70,90 and 91- (Tinted)	
15	E148165		Mounting Plate for 14 and 16	
16	E14R175		Bracket - R.H. for 17	
17	F14A008		Microswitch for 15 - R.H. side	
18	E14N1e8		Delivery Guard	
19	E14N187		Pivot Bar for 18	
20	E14N270		Back Guard - complete with 50,79, 86,87 and 88	
21	E14N284		Ink Water Guard (Clear)	
22	E14N281		Printer Guard -Complete (Clear)	
23	E14N303		Delivery Guard (Clear)	
24	E14N286		Back Guard - Complete (Tinted)	

• 313 Parts

50	LOHW122	(4) HW122	Spring Washer for 87	
51	LOCR017	(25) CR17	Washer for 68 and 70	
52	LOCR098	(10) CR98	Washer for 60	
53	LOLR022	(10) LR22	Washer for 61,63 and 64	
54	LOLR008	(25) LR8	Washer for 10,15 and 65	
55	LOCR145	(25) CR145	Lock Washer for 67	
56	LOOR003	(25) OR3	Washer for 12	
57	LOCR108	(10) CR108	Washer for 69	
60	LOCS420	(10) CS420	Screw for 16	8-32 UNC x 5/8in long
61	L0CS348	(25) CS348	Screw for 15	8-36 UNF x 3/Bin long
62	M14A009	(10) 0510	Screw for 1	10-32 UNF x 5/8in long
63	L0CS379	(10) CS379	Screw for 3 and	48-32 UNC x 5/16in long
64	LODS002	(25) OS2	Screw for 5	8-32 UNC x 3/Bin long
65	M14A003	(5)	Screw for 6	4-40 UNC x 3/4in long
66	M14A002	(5)	Screw for 9 and	12 1/4 - 20 UNC x lin long
67	LOCS419	(25) CS419	Screw for 13	6-32 UNC x 1/4in long
68	L00S013	(10) 0513	Screw tor 14	10-32 UNF x lin long
69	LOCS420	(10) CS420	Screws for 9	8-32 UNC x 3/81n long
70	M14A012	(10)	Screw for 91	M5 x 12mm
72	LOCT072	(10) CT72	Nut for 10,15 and 65	4-40 UNC
78	L04J078	(4)	Spring for 1	
79	LOHU004	(4) HU4	Spring for 87	
84	L02J134	(4)	Spacer for 6	
85	L02J135	(4)	Spacer for 1 and 60	
86	LOHW117	(4) HW117	Lock Cap tor 87	
87	M14A004	(4)	Lock Stud for 2	
88	L05E417	(IO)	Label 10r2	
89	LOCW351	(10) CW351	Buffer for 8 and 12	
90	L02N125	(5)	Bush for 14	
91	P14N202	(4)	Knob for 8 and 14	
92	M14A013	(10) 211761056P	Clic Rivet	
93	LOLW063	(10) LW63	Sleeve for 69	

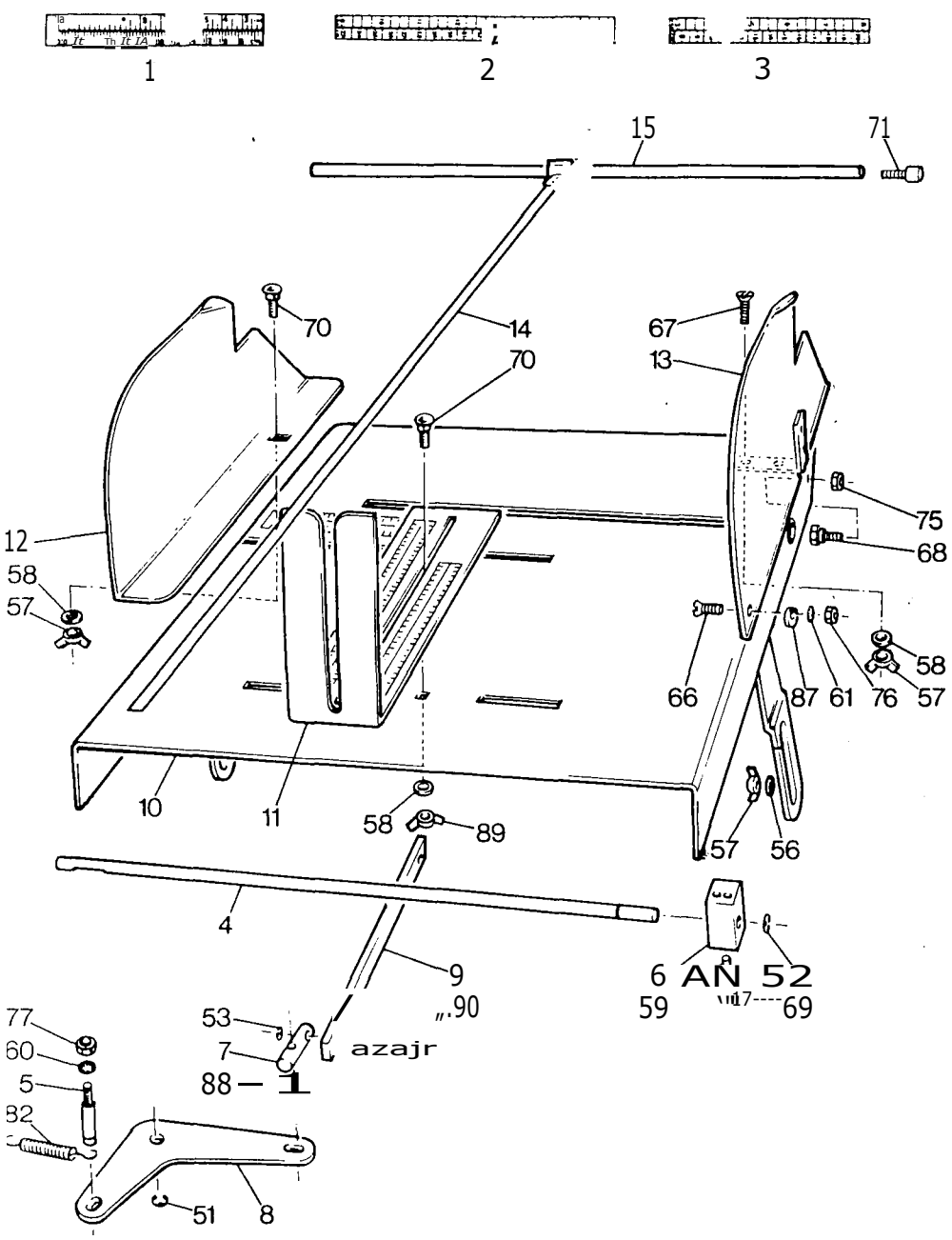

Index No.	Part No	Equal to	Part	Serial No.
1	E05E292	10-3	Scale for 10	
• 2	E05E293	2D-3	Scale for 11 - R.H.	
3	E05E295		Scale for 11 - L.H.	
' 4	F14D301	30.3	Jogger Shaft	
5	F140002	170	Stud •	
6	F140003	20D	Jogger Block	
7	F14D004		Shaft	
8	F140005	270	Link	
9	F140006	41J	Link	
• 10	E14G028		Collecting Tray	
• 11	E14G024		Back Guide - complete with 2 arid 3	
12	E14G017		Paper Guide - R.H.	
13	E14G044		Paper Guide - L.H. - assembled complete with 61,66,76 and 87	
'14	F14R307	3R3	Paper Bail	
• 15	F14R308	8R-3	Spindle	

313 Parts

51	LOOP003	(25) 0P3	Spring Clip	
52	LOOP002	(25) 0P2	Spring Clip	
53	LOOP005	(25) 0P5,LP5	Spring Clip	
56	LOOR003	(25) 0R3	Washer	
58	LOOR005	(10) ORS	Washer	
59	10011042	(10) 01142	Plug	
60	LOCR003	(25) CR3	Lock Washer	
61	LOOR061	(10) 01161	Lock Washer	
66	L005075	(10) 0S75	Screw	5-40 UNC x 5/16in
67	M14J009	(25)	Screw Tufbk	8-32 UNC x 3/81n
88	L00S198	(10) 05198	Pivot Screw	
69	L005199	(5) 0S199	Locking Screw	
70	L00S276	(5) 05276	Bolt	M6 x 20mm
71	L005036	(10) 0536	Screw	1/4in-20 UNC x lin long
75	LOHT050	(10) HT50	Nut	1/4in 20 UNC
76	LOOT013	(10) 0T13	Nut	5-40 UNC
77	M14M009	(10)	Nut	10-32 UNF
82	MI40002	(5) 70-3	Spring	
87	L00W058	(5) 0W58	Support Pad	
88	L00W059	(3) 0W59	Stud	
89	M140001	(5)	Wing Nut	
90	LOOW060	(3) 0W60	Pin	

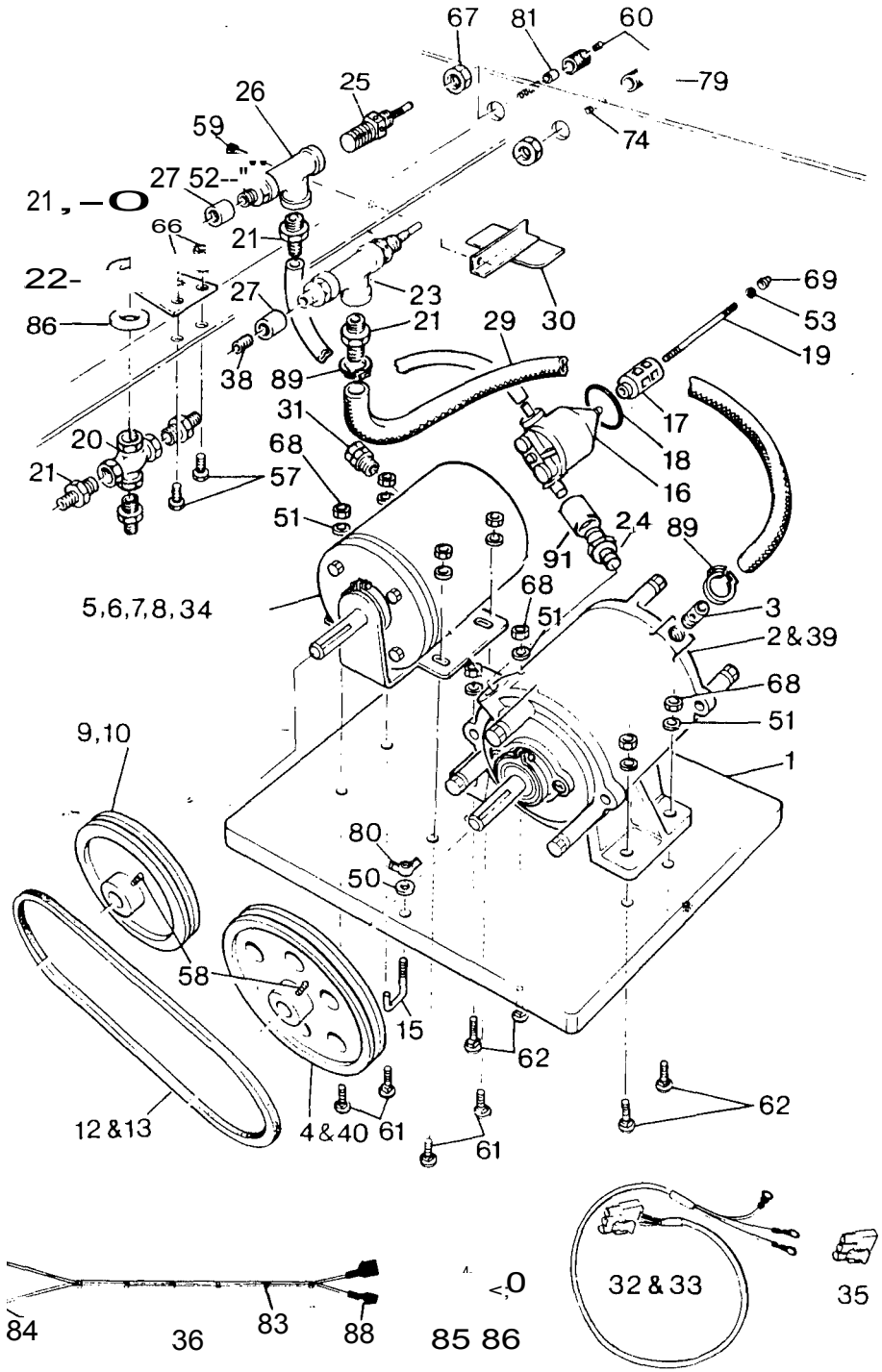

Index No.	Part No.	Equal to	Part	Serial No.
1	F14C001	103C	Base Board	
2	E141006	9141006L99	Vacuum Pump .750in (19.06mm) dia.Shaft old-style	
3	F14C002	95C	Adaptor	
4	E141007	9141007G99	Pulley for 2 .7501n (19.06mm dia. Bore	
• 5	F14E012	4E-3	Motor 1/2h.p. 100V/110V 50 Hz	
• 6	F14E013	6E-3	Motor 1/2h.p. 200V/220V 60 Hz	
• 7	F14E014	9E-3	Motor 1/2h.p. 220V/240V 50 Hz	
* 8	F14E015	10E-3	Motor 1/2h.p. 100V 50Hz/50 Hz	
• 9	E141043		Pulley 50 Hz	
• 10	E141044		Pulley 60 Hz	
• 12	F14C010	ec	.V• Belt (Motor to Pump) - 50 Hz	
• 13	F14C304	———	V Bell (Motor to Pump) -60 Hz	
15	F14C013	7C	Clamp	
16	E141065		Filter Assembly with 24 and 91	
17	F14C014	96C	Element	
18	E14T010	9141010G99	Sealing Washer	
19	E14T011	9141011C99	Stud	
20	F14C015	16C	Coupling	
21	F14C016	17C	Adaptor	
22	E141014		Bracket	
23	E141070		Air Valve Assembly	
24	F14C032		Adaptor	
25	E141056		Vacuum Valve Assembly	
26	E141051		Vacuum Tee	
27	F14CO21	101C	Connector	
29	F14CO25	102C	Air Hose 533mm (21in) long	
30	F14CO24	84C	Cover	
31	F14E021	122W	Gland	
32	E14R214		Lead for 5,6,7 and 37	
33	E14R215		Lead for 8 and 34	
34	F14E023	5E-3	Motor 1/2h.p. 110/120V 60 Hz (CSA)	
35	F14E026		Plug for 32 and 33	
36	E14R259		Thermal Cut-out Harness for 34 (CSA&UL)	
37	F14E029		Motor 1/2h.p. Dual Voltage 50 Hz	
39	E14T001		Vacuum Pump with 40 .7871n (20mm) dia Shaft	
40	E141071		Pulley for 39 .7871n (20mm) dia. Bore	

* 313 Parts

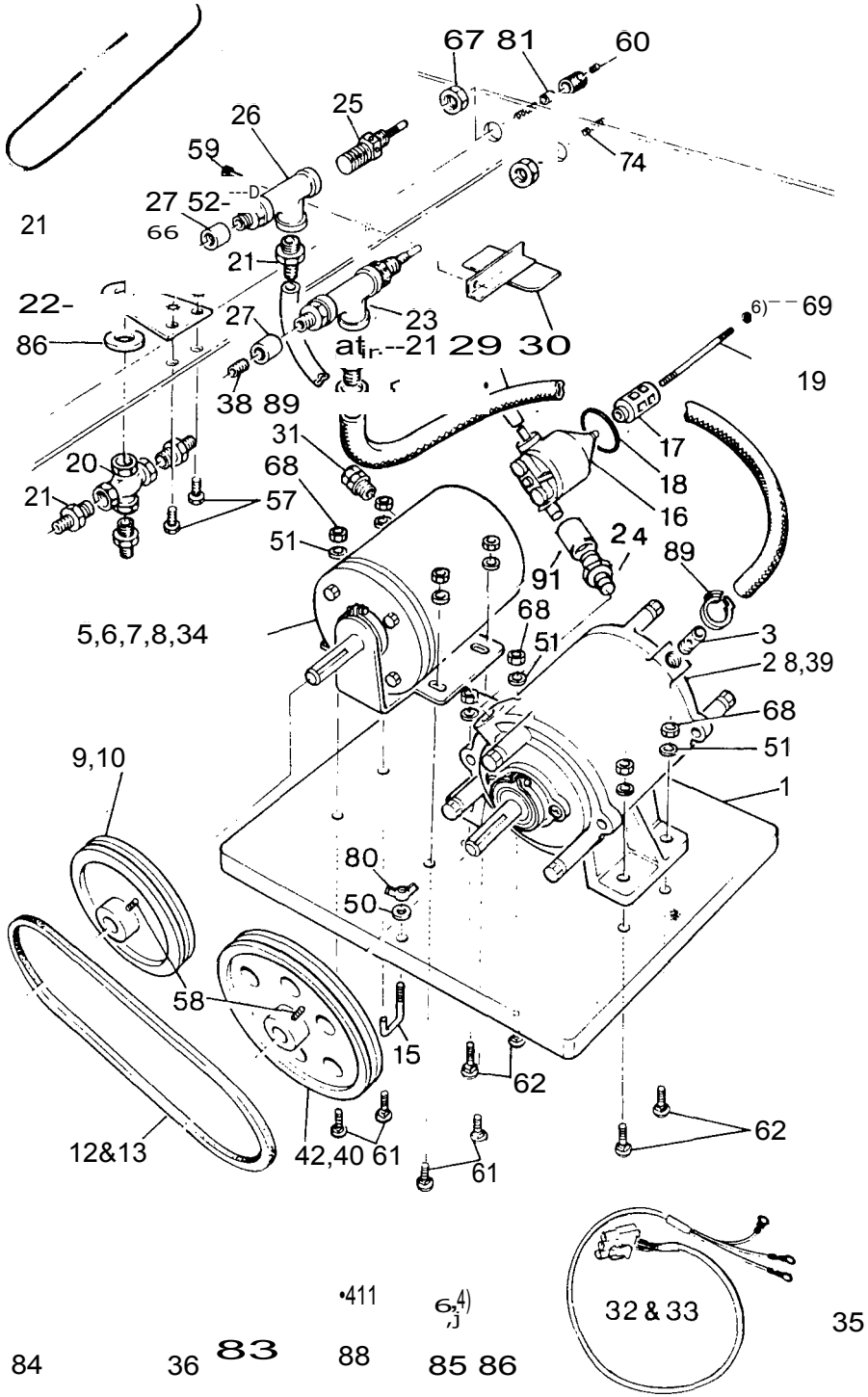

Index No.	Part No.	Equal to	Part	Serial No.
50	LOOR003	(25) 0133	Washer	
51	LOOR007	(25) 0R7	Washer	
52	L00R066	(25) 0R66	Lock Washer	
53	P14T012	(10) 9141012Y99	Washer	
54	LOCR005	(25) CR5	Lock Washer	
57	LOHS175	(10) HS175	Screw	144in-28 UNF x 3/4in long
58	LOCS410	(10) CS410	Screw	1/4in-20 UNC x 3/8in long
59	L00S033	- (25) 0S33	Screw	1/4in-20 UNC x 5/81n long
60	L00S166	(25) 0S166	Screw	10-32 UNF x 1/4in long
61	L00S257	(5) 0S257	Bolt	M8 x M25
62	M14C001	(5) 222765173P	Bolt	M8 x M40
66	M14G006	(10) LOHT055	Nut	1/41n -28 UNF
67	LOOT006	(5) 0T6	Nut	5/8in - 18 UNF
69	LOHT006	(10) 0T37,HT6	Nut	M8
69	P14T009	(10) 914TOMY99	Nut	2 BA
74	L00U093	(5) 0U93	Spring	
79	LOOW021	(2) 0W21	Knob	
80	L00W055	(5) 0W55	Wing Nut	1/4 - 20 UNC
81	L00W197	(5) 0W197	Collar	
82	L02J129	(5)	Spacer	
83	LOHW104	(10) HW104	Tie tor 36	
84	M14W037	(10)	Eyelet for 32,33 and 36	
85	M14W017	(10)	Terminal for 36	
86	M14W020	(10)	Tab for 36	
87	M13V006	(10)	Boot for 86	
88	LOG W495	(25) CW495	Boot for 85	
89	LOHW410	(5) HW410	Clip	
90	LOHWO93	(10) HW93	Tie Retainer for 2 - (not shown)	
91	P141086	)	Tube	

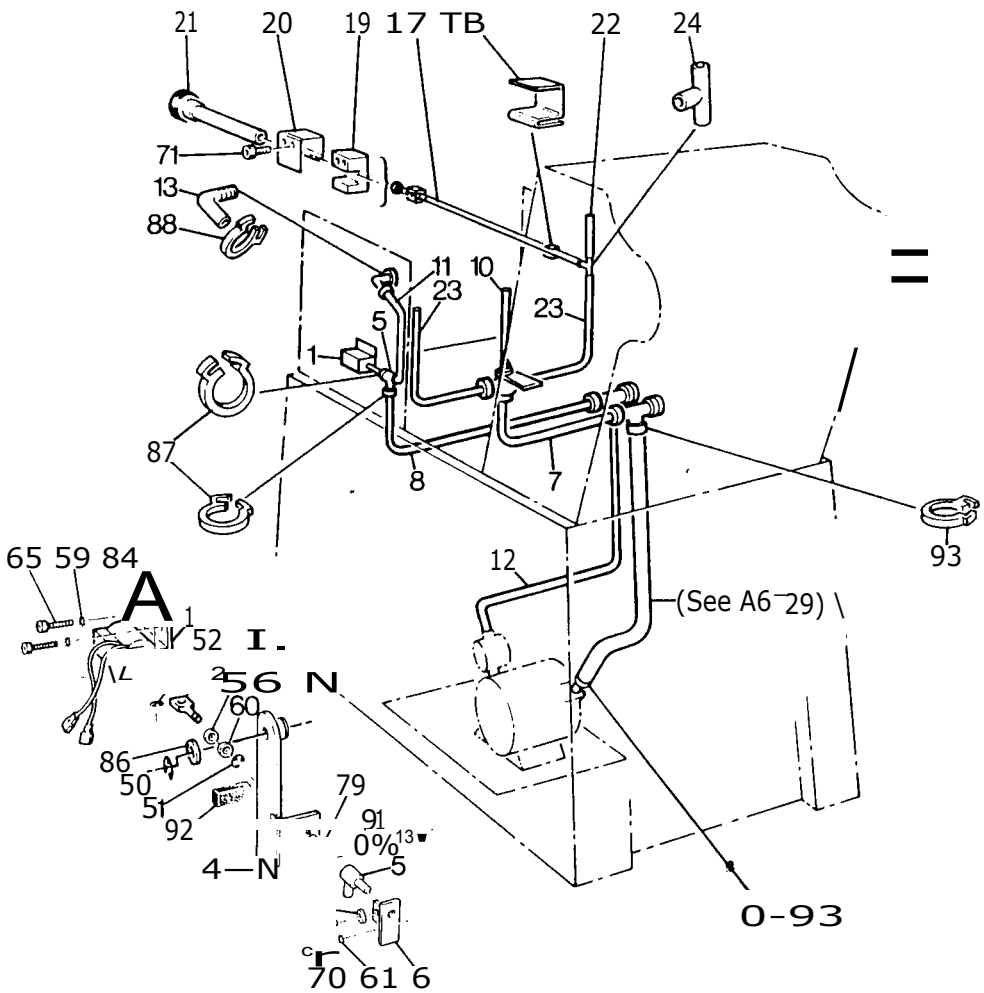

Index No.	Part No.	Equal to	Part	Serial N
				low 16D!
1	E14R218		Solenoid	22-29V
2	E141020		Shaft	
4	E141015		Vacuum Shut-off Assembly	
5	E147018		3-way valve for Vacuum Pipe	
6	E147017		Bracket	
7*	E147036		Air Pipe from 4-way Coupling to Control Valve	11.1/4 in
8*	E141049		Vacuum Pipe from 5 to Vacuum Tee	22 in
10	E147034		Centre Blower Pipe	10 in
11	E141030		Vacuum Pipe	13.1/4 in
12	E147031		Vacuum Pipe from Filter to Vacuum Tee	18.1/4 in
13	F14H004	56H	Connecting Tube	
17*	F14C305	~~3C-3~~	Hose	26 in
18*	F14C306	7C-3	Retaining Clip	
19*	F14C307	8C-3	Bracket	
20*	F14C308	9C-3	Retaining Plate	
21*	F14C309	10C-3	Side Blower	
22*	F14C310	4C-3	Left and Right Blower Pipe	8 in
23*	F14C311	6C-3	Left and Right Blower Pipe	18 in
24*	F14C312		Tee Hose Connector	

* 313 Parts

50	LOOP002	(25)	OP2	Spring Clip
51	LOLP003	(25)	LP3	Spring Clip
52	LOCP009	(25)	CP9	Spring Clip
56	LOOR014	(25)	OR14	Washer
57	LOOR003	(25)	OR3	Washer
59	LOOR067	(25)	OR67	Lock Washer
60	LOCR058	(25)	CR58	Washer (plastic)
61	LOOR066	(25)	OR66	Lock Washer
65	LOOS003	(10)	OS3	Screw 8-32 UNC x 3/8 in
67	L005036	(10)	OO6	Screw 1/4 in-20 UNC x 1 in
70	L005032	(25)	OS32	Screw 1/4 in-20 UNC x 1/2 in
71	LOOS009	(25)	OS9	Screw 10-32 UNF x 1/2 in
79	L04A149	(5)		Spring
84	L035211	(5)		Peg
86	L02J131	(5)	802J131Y00	Spacer
87	LOOW072	(3)	OW72	Clamp
88	M14C002	(5)		Clamp
91	L03W081	(5)		Spring Peg
92	LOHW145	(4)	HW145	Pad
93	LOHW410	(5)	HW410	Clamp
94	M14C004	(10)		Edge Clip

Note: For Air Vacuum with Blow Dry, Above 160582 - see K5

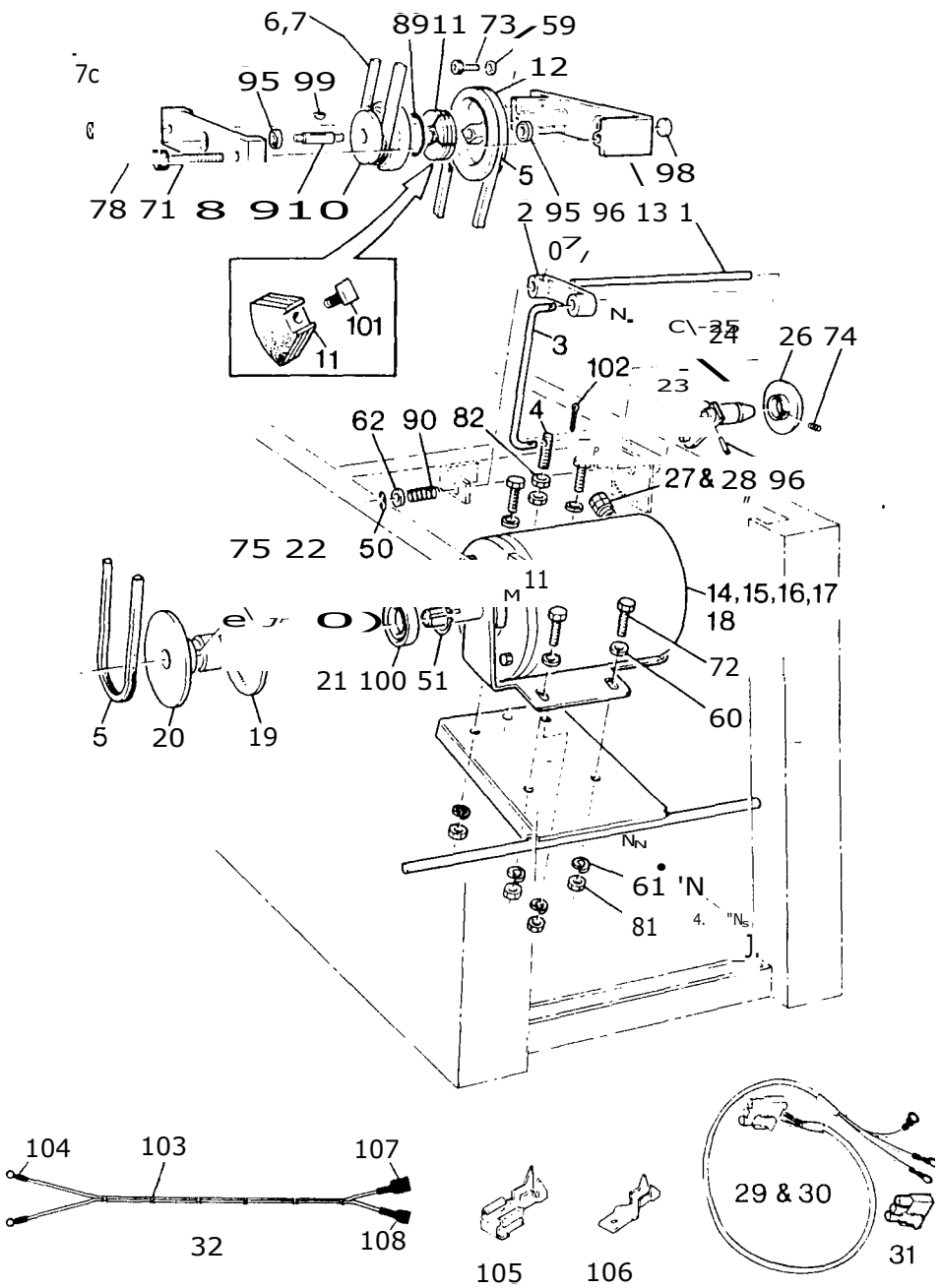

Index No.	part No.	Equal to	Part	Serial
1*	F14E301	1E-3	Speed Adjuster Shaft	
2	F14E002	701E	Arm	
3	F14E024		Adjusting Rod	
4	F14E025		Adjusting stud	
5	F14E003	26E	'V' Belt (Clutch to Motor)	
6	F14E004	79E	'V Belt (Clutch to Drive Shaft) - 50 Hz	
7	F14E005	27E	'V' Belt (Clutch to Drive Shaft) - 60 Hz	
8	F14E006	30E	Bearing Plate - front	
9	F14E007	33E	Shaft	
10	F14E008	35E	Pulley - small	
11	F14E009		Shoe	
12	F14E010	38E	Pulley - large	
13	F14E011	41E ----	Bearing Plate - back	
14	F14E012	4E-3	Drive Motor 1/2 hp 100V/110V 50 Hz	
15	F14E023		Drive Motor 1/2 hp 110V/120V 60 Hz (CSA)	
16	F14E013	6E-3	Drive Motor 1/2 hp 200V/220V 60 Hz	
17	F14E014	9E-3	Drive Motor 1/2 hp 220V/240V 50 Hz	
18	F14E015	10E-3	Drive Motor 1/2 hp 100V 50 Hz/60 Hz	
19	F14E016	64E	Inner Pulley	
20	F14E017	65E	Outer Pulley	
21	F14E018	17E	Spring	
22	E14J062	66E	Key	
23	E14J082		Lever	
24	E141033	70E	Shaft	
25	E14L029		Handle	
26	E141025		Speed Indicator Dial	
27	F14E020		Gland for 14,16,17 and 18	
28	F14E021	122W	Gland for 15	
29	E14R212		Lead for 14,16,17 and 18	
30	E14R213		Lead for 15	
31	F14E026		Plug for 29 and 30	
32	E14R260		Thermal Cut-out Harness for 15 (CSA/UL)	

* 313 Part

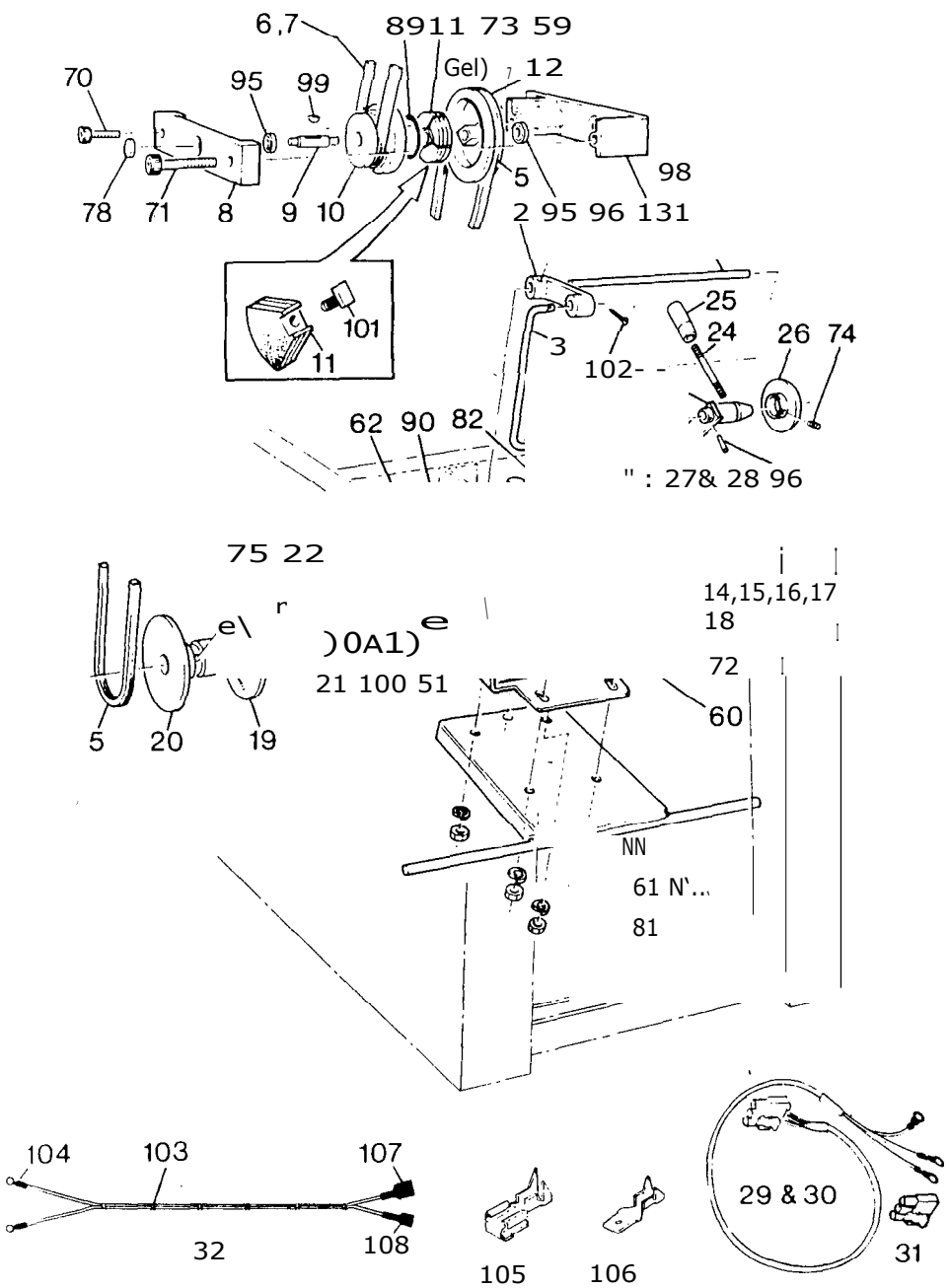

Index No.	Part No.		Equal to	Part	Serial
50	L00P002	›	0P2	Spring Clip	
51	L00P021	(25)	0P21	Spring Ct.:2	
59	L00R002	(25)	0R2	Washer	
60	L00R007	(25)	0R7	Washer	
61	L00R080	(10)	0R80	Spring Washer	
62	L00R006	(10)	0R6	Washer	
70	L00S033	(25)	0S33	Screw 1/4 in-20 UNC x 5/8 in	
71	L00S047	(2)	0S47	Screw 3/8 in-16 UNC x 3.1/4 in	
72	L00S060	(5)	0S60	Screw 5/16 in-18 UNC x 3/4 in	
73	L00S046	(5)	0546	Screw 3/8 in-16 UNC x 1 in	
74	L00S167	(25)	0S167	Screw 10-32 UNF x 5/16 in	
75	L00S170	(10)	0S170	Screw 1/4 in-20 UNC x 1/4 in	
81	L00T002	(25)	072	Nut 5/16 in-18 UNC	
82	M14E001	(10)	217811946P	Nut 5/8 in-18 UNF	
89	L00U003	(5)	0U3 ----	Spring	
90	L00U094	(5)	0U94	Spring	
95	L00W022	(2)	0W22	Bearing	
96	L00W046	(25)	0W46	Spring Dowel 5/32 in dia. x 1 in	
98	L00W061	(5)	0W061	Expansion Plug	
99	L00W062	(20)	0W062	Key	
100	L00W066	(3)	0W66	Thrust Washer	
101	M14E003	(5)		Pad	
102	M14E002	(25)	211285127P	Split Pin 3.2mm x 20mm	
103	L0HW104	(10)	HW104	Tie	
104	M14W037	(10)		Eyelet for 29,30 and 32	
105	M14W017	(10)		Terminal for 32	
106	M14W020	(10)		Tab for 32	
107	M131/006	(10)		Boot for 106	
108	L0CW495	(25)	CW495	Boot for 105	

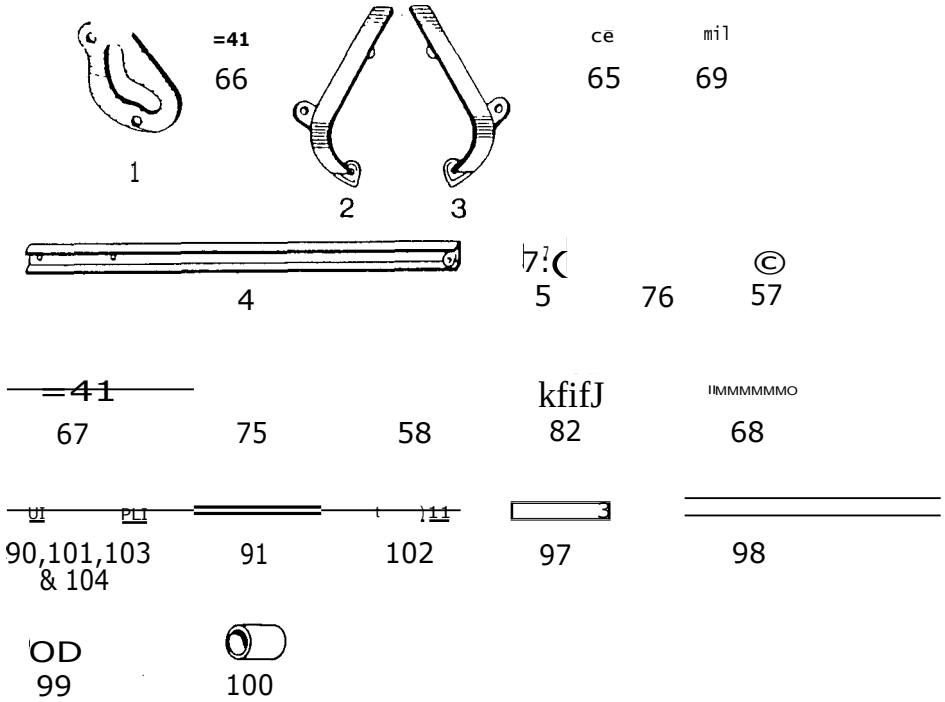

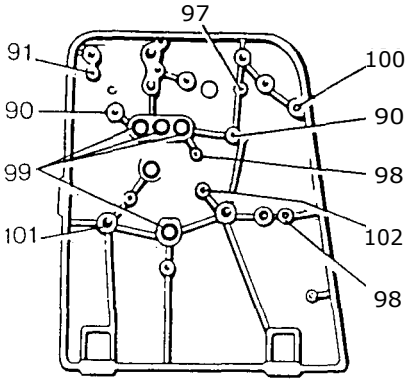

6

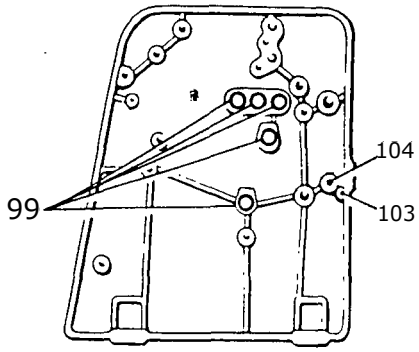

7

Index No.	Part No.		Equal to	Part	Serial
1	F14F001		1F	Cam	
2	F14F002		4F	Feedboard Chain Guar:. - R.H.	
3	F14F003		3F	Feedboard Chain Guard - L.H.	
4	E14F003			Feedboard Runner	
5	F14F004		17F	Adjusting Screw for 4	
6	E14E179			Feeder Side Frame - L.H.	
7	E14E178			Feeder Side Frame - R.N.	
57	LOOR003	(25)	0R3	Washer for 76	
58	LOOR007	(25)	0R7	Washer for 75	
65	LOOS014	(25)	0S14	Screw for 2 and 3	10-24 UNC x 3/8 in
66	LOOS018	(25)	0S18	Screw for 1	10-24 UNC x 7/8 in
67	LOOS037	(10)	0S37	Screw for 5	1/4 in-20 UNC x 1.1/4 in
68	L00S054	(5)	0554	Screw for 82	5/16 in-18 UNC x 1.1/4 in
69	100S073	(10)	0573	Screw for 4	10-24 UNC x 1/2 in
75	LOOT003	(25)	0T3	Nut for 68	5/16 in-18 UNC
76	LOHT050	(10)	HT50,0T9	Nut for 67	1/4 in-20 UNC
82	LOOU007	(5)	007	Cushion Spring for 6 and 7	
90	LOOW068	(5)	0868	Spring Peg for 6	
91	L0CW562	(10)	0842,CW562	Spring Dowel for 6	1/8 in x 3/4 in
97	1008075	(3)	0W75	Spring Peg for 6	
98	L00W076	(3)	0W76	Spring Peg for 6	
99	L00W207	(4)	0W207	Bush for 6 and 7	
100	L00W208	(5)	0W208	Bush for 6	
101	LOOW070	(3)	0W70	Spring Pin for 6	
102	L00W071	(5)	0W71	Pin for 6	
103	L00W218	(5)	0W218	Spring Peg for 7	
104	L00W074	(3)	0W74	Spring Peg for 7	

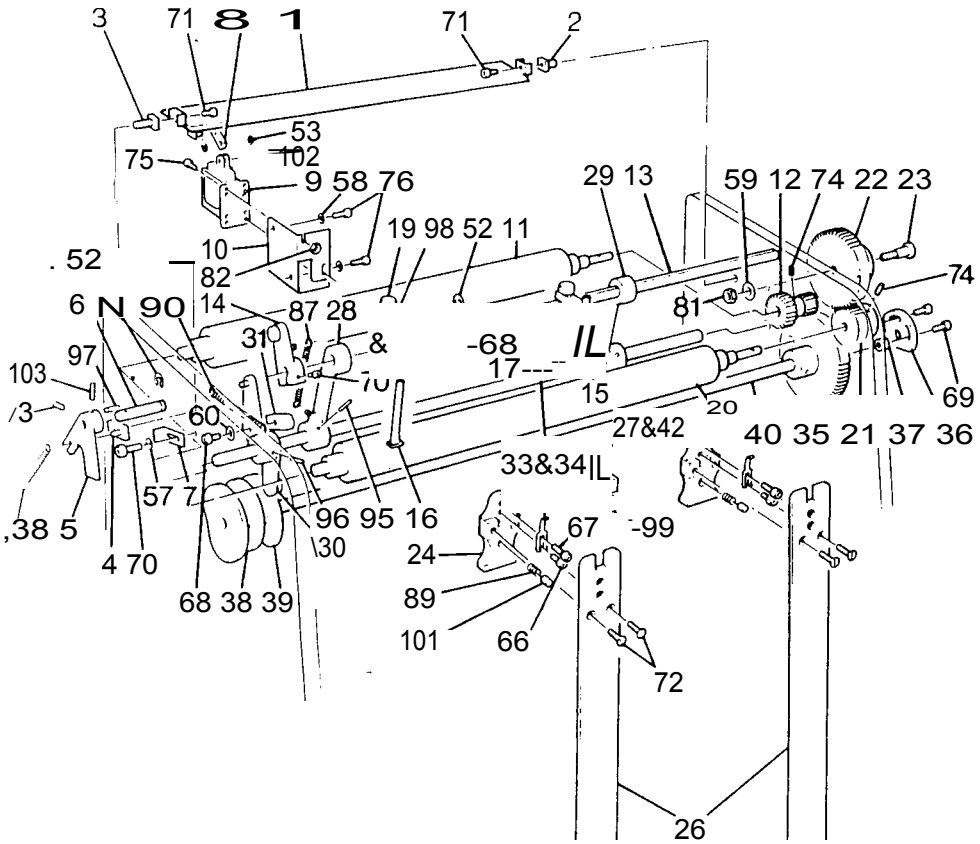

Index No.	Part No.	Equal to	Part	Serial
1*	E14E112	14G-3	Deflector	
2	F14G002	2G	Stud	
3	F146003	46	Stud	
4	F14G004	5G	Arm	
5	F14G005	65H	Arm	
6	F14G006	66H	Shaft	
7	F146007	6CH	Stop	
8	E14G022		Link	
9	E14R196		Solenoid	
10	E14G023		Bracket	
11*	F14G301	1G-3	Second Feed Roller	
12	F14G010	96	Gear	
13	E14E135		Shaft	
14	E14E050	3046	Arm	
15	F14G014	206	Sucker - R.H.	
16	F14G015	21G	Sucker - L.H.	
17*	E14E143		Removable Holder	
19*	E14E158		Screw	
20	E14E206		First Feed Roller	From 16[
21	F14G018	33G	Gear	
22	F146019	94G	Intermediate Gear	
23	F14G020	956	Stud	
24	F14G021	366	Back Plate	
25	F14G022	37G	Spring	
26	F14G023	436	Front Paper Guide	
27	F14G024	446	Paper Separator Blower (centre)	
28	E14E160	305G	Arm - L.H.	
29	E14E029	2006	Arm - R.H.	
30	E14E131	2016	Sucker Arm	
31	F14G028	266	Adjusting Block (fitted to 30)	
33	E14E200	106-3	Spindle	
34*	E14E054		Sucker Spindle - complete with 28, 29 and 30	
35	F14G201	96-2	Gear	
36*	E14E062		Cam	
37	F14G032	2756	Spacer	
38*	E14E027	126-3	Height Control Cam	
39	E14E022	76-2	Sucker Cam	
40*	E14E066		Camshaft - complete with 35,38,39 and 96	
41*	E14E130	2296	Sucker (packed in a carton)	
42	E14E211		Paper Separator Blower (centre) New-style, See L1	From 16D

* 313 Parts

Note: For 4 Sucker System see C5

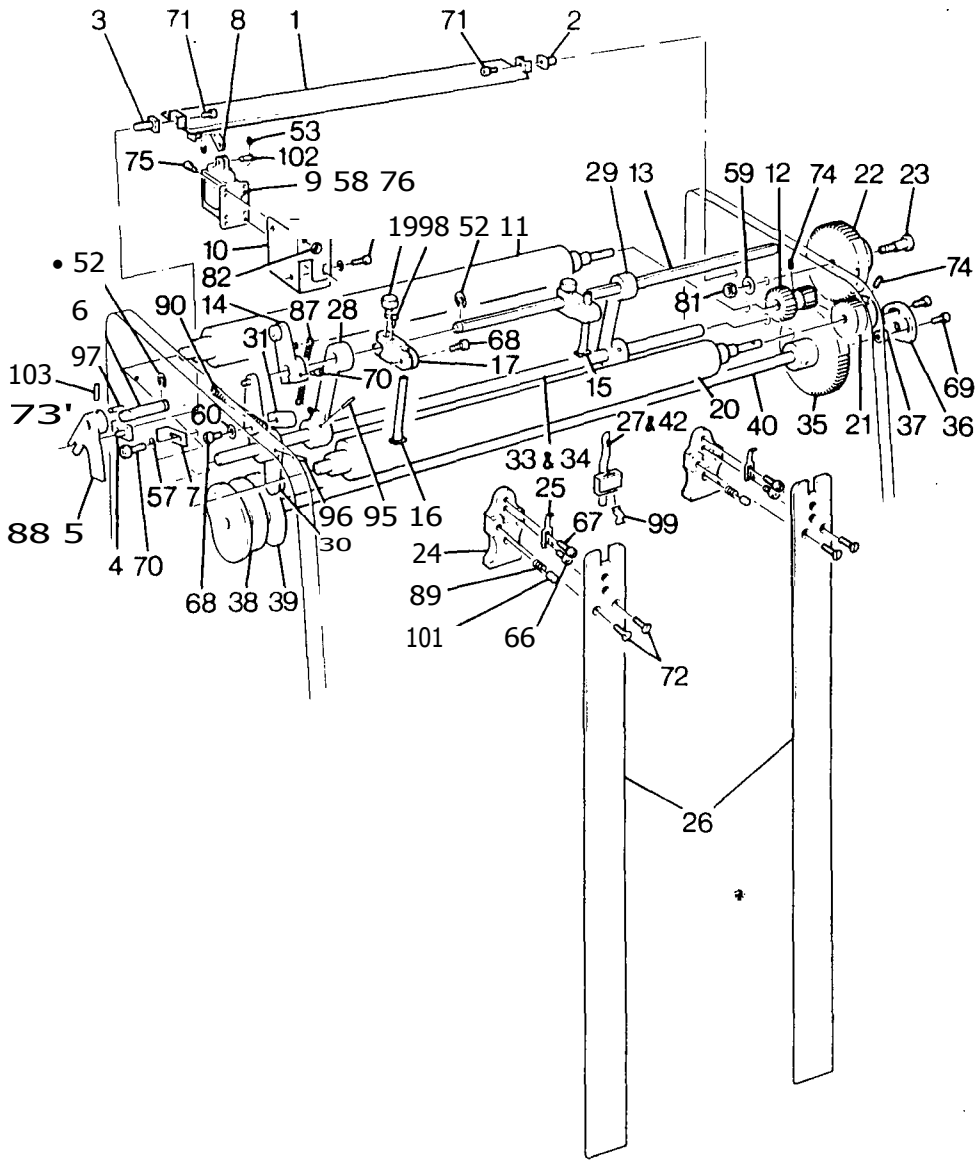

Index No.	Part No.		Equal to	Part		Serial
52	LOCP013	(2_	CP3	Spring Clip		
53	LOCP009	(10)	CP9	Spring Clip		
57	LOCR153	(10)	CR153,OR21	Washer		
58	LOCR108	(10)	CR108	Washer		
59	LOOR007	(25)	OR7	Washer		
60	LOOR008	(10)	OR8	Washer		
66	LOOS002	(25)	OS2	Screw	8-32 UNC x 1/4 in	
67	LOOS004	(25)	OS4	Screw	8-32 UNC x 1/2 in	
68	LOOS009	(25)	OS9	Screw	10-32 UNF x 1/2 in	
69	M14G002	(25)	OS16	Screw	10-24 UNC x 5/8 in	
70	LOOS018	(25)	OS18	Screw	10-24 UNC x 7/8 in	
71	LOOS008	(25)	OS8	Screw	10-32 UNF x 3/8 in	
72	LOOS074	(10)	OS74	Screw	8-32 UNC a 1/2 in	
73	LOOS156	(10)	OS156	Screw	10-24 UNC x 5/16 in	
74	LOOS252	(10)	O5252----	Screw	1/4 in-20 UNC x 5/16 in	
75	LOCS419	(25)	CS419	Screw	6-32 UNC x 1/4 in	
76	LOOS005	(10)	OS5	Screw	8-32 UNC x 3/4 in	
81	LOOT010	(5)	O110	Nut	5/16 in - 18 UNC	
82	LOOT030	(10)	O730	Nut	6-32 UNC	
87	LOCU256	(5)	CU256	Spring		
88	100U009	(10)	009	Spring		
89	LOOOO10	(25)	OU10	Spring		
90	LOOOO89	(5)	OO89	Spring		
95	M140005	(25)		Taper Pin HT	3/16 in x 7/8 in	
96	M140002	(25)		Taper Pin HT	3/16 in x 1 in	
97	LOCW562	(10)	OW42,CW562	Spring Dowel	1/8 in dia. x 3/4 in	
98	P14E157	(5)		Pin		
99	LOOW079	(10)	OW79	Leaf Spring		
101	LOOW210	(25)	OW210	Plunger		
102	L03S211	(5)		Peg		
103	LOCW766	(10)	CW766,OW8	Taper Pin	5/32 in x 7/8 in	

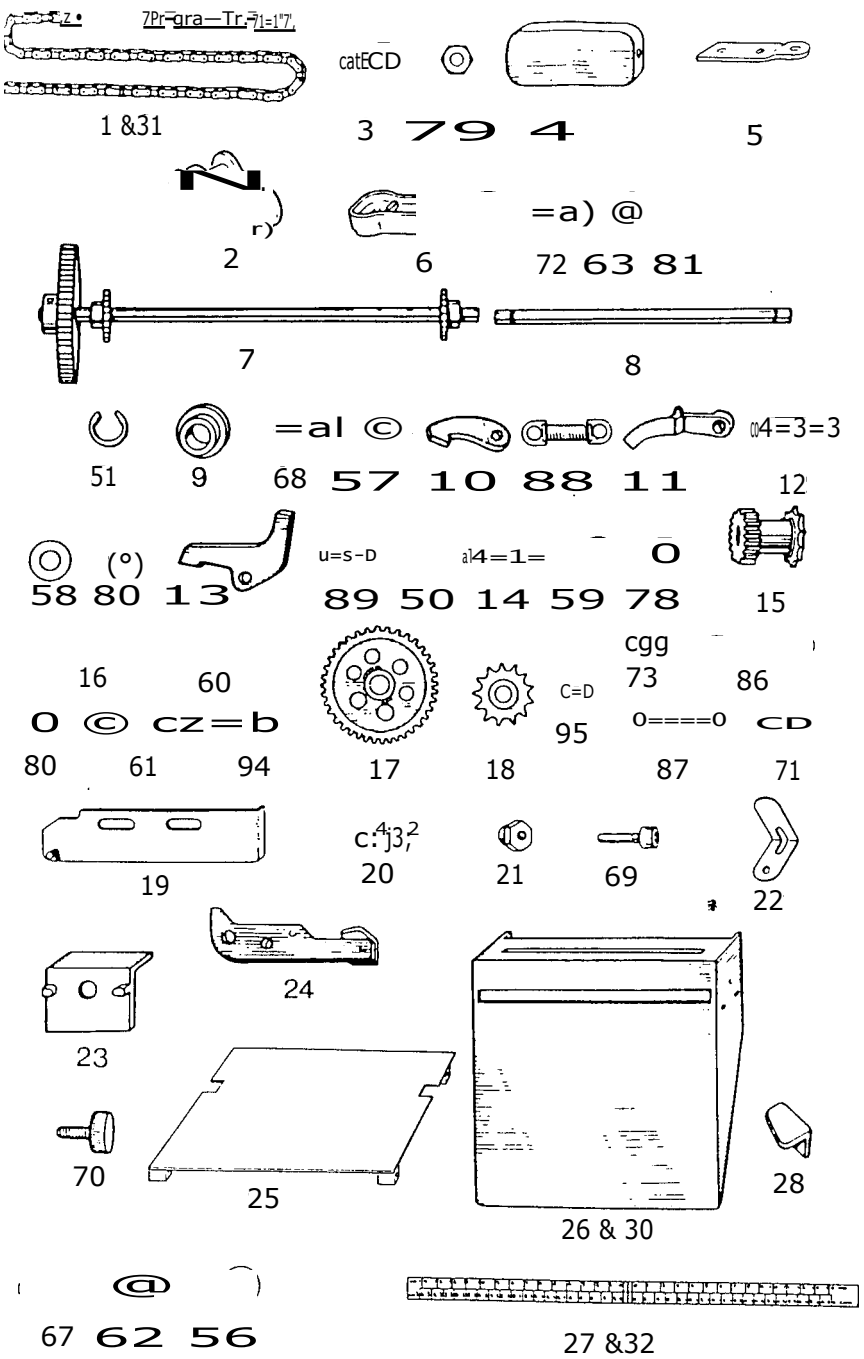

Index No.	Part No.	Equal to	Part	Serial
1#	F141-056	3066	Chain complete with 2 for 4	
2g	F146144		Link for 1	
3g	F146052	556	Stud for 1	
4g	F14G053	57G	Counterweight	
5g	F14G054	586	Lifting Plate for 26	
6g	F146055	3103	Guide for 5	
7*	F14G308	166-3	Feedboard Lifting Shaft - complete with 17,18 and 94	
8*	F146315	17G-3	Shaft for 9	
9	F146058	706,144CP	Roller for 1	
10	E14E045	73G	Retaining Pawl for 26	
11	F146060	77G	Release Arm for 26	
12	F146061	796	Stud for 10,11 and 24	
13	F146062	82G	Feedboard Trip Pawl	
14	F146063	8517	Pivot Stud for 13	
15	F146064	886	Feeder Drive Gear and Sprocket	
16	F146065	896	Stud for 15	
17	F146066	203G	Gear for 7	
18	E14E028	2046	Sprocket for 7	
19	E14E084	2356	Latch for 24	
20	F146068	2366	Spring Peg for 19	
21	F146069	237G	Guide Nut for 19	
22	F146070	2626	Stop Bracket for 23	
23#	E14F015		Support for 26	
24	F14G071	2886	Release Lever for 26	
25*	E14E069		Support Plate	
26*#	E14F021		Feedboard	
27*#	E05E297	156-3	Scale for 26	
28	E14E079	291G	Finger Piece for 24	
30	See K4,1 and 4		Feedboard for Magazine Feed	
31	See 1(5,9		Chain for Magazine Feed	
32	See 1(4,3		Scale for Magazine Feed	

* 313 Parts
\# Parts not fitted to Magazine Feed

Note: For Magazine Feed Parts not shown here see K4 and K5

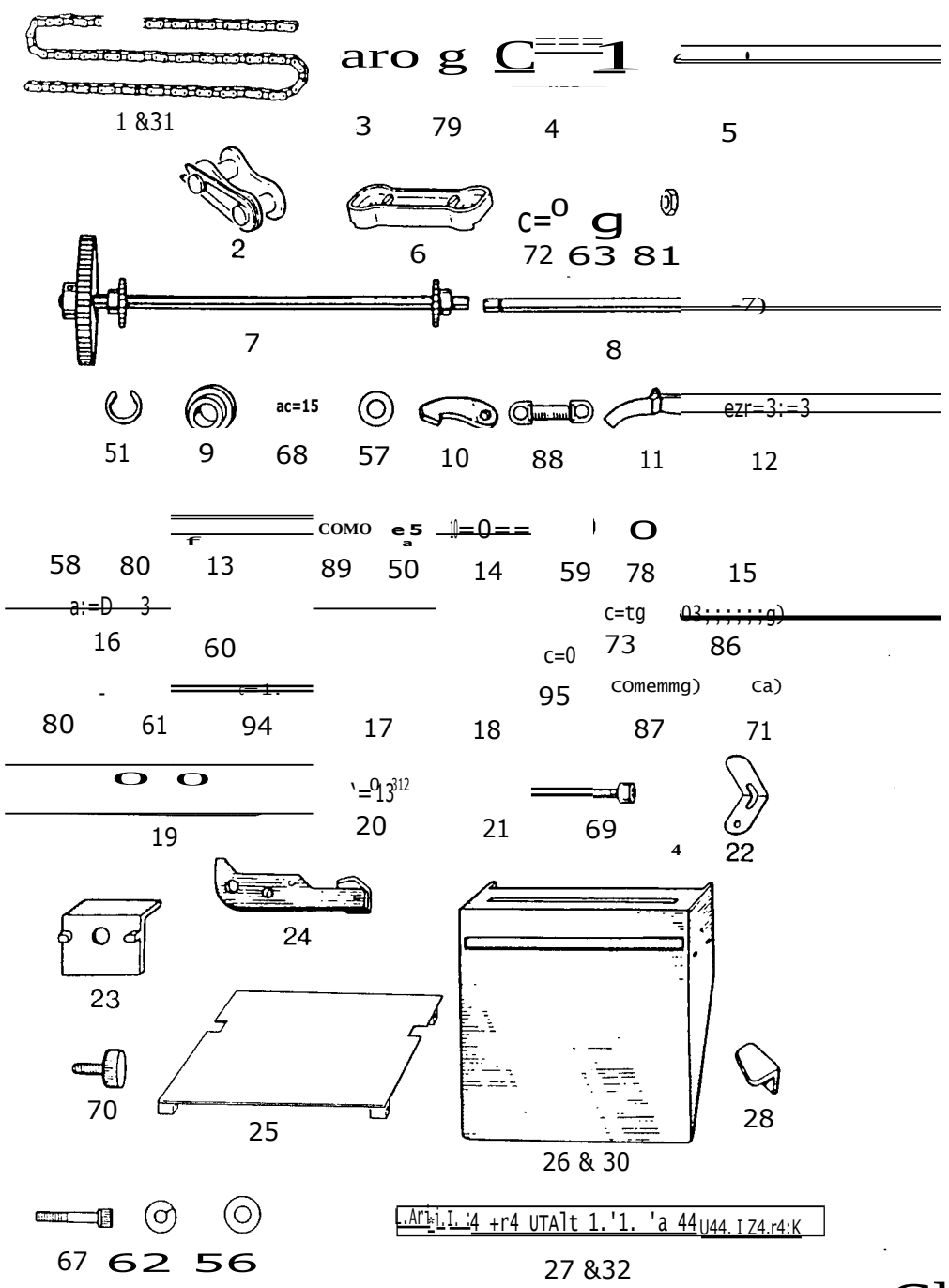

Index No.	Part No.		Equal to	Part	Serial t
50	L00P005	(25)	0P5	Spring Clip for 1s	
51	LOCP008	(25)	CP8	Spring Clip for 8	
56	LOOR001	(25)	0R1	Washer for 67	
57	LOOR003	(25)	0R3	Washer for 68 and 70	
58	LOOR004	(10)	0R4	Washer for 80	
59	LOOR007	(25)	0R7	Washer for 78	
60	LOOR011	(10)	0R11	Washer f0r 80	
61	LOOR012	(5)	0R12	Washer for 80	
62	L00R0211	(10)	0R20	Spring Washer for 67	
63	LOCR005	(25)	CR5	Lock Washer for 81	
67	L00S020	(10)	0S20	Screw for 25 10-24 UNC x 1.1/2 in	
68	L005036	(10)	0S36	Screw for 8 1/4 in-20 UNC x 1 in	
69	L00S043	(25)	0S43	Screw for 21 8-36 UNF x 1/2 in	
70	1005048	(5)	0548	Locking Screw for 23	
71	L005158	(10)	05T516	Screw for 86 10-24 UNC x 3/4 in	
72	1005355	(10)	CS355,05196	Screw for 6 1/4 in-20 UNC x 3/4 in	
73	L005348	(10)	CS348	Screw for 27 8-36 UNF x 3/8 in	
78	1001002	(25)	072	Nut for 14 5/16 in-18 UNC	
79	LOHT050	(10)	HT50,079	Nut for 3 1/4 in-20 UNC and 72	
80	LOOT017	(10)	0717	Nut for 12, 3/8 in-16 UNC 15 and 16	
81	M14G005	(10)	218811031P	Nut for 72 1/4 - 20 UNC	
86	LOOU013	(10)	0013	Spring for 24	
87	1000014	(10)	0014	Spring for 11	
88	1000015	(10)	0U15	Spring for 19	
89	1000017	(25)	0017	Spring for 13	
94	10CW765	(25)	CW765	Taper Pin for 173/16 in x 1.1/4 in	
95	L000007	(25)	0W7	Taper Pin for 183/16 in x 1 in	

Cl

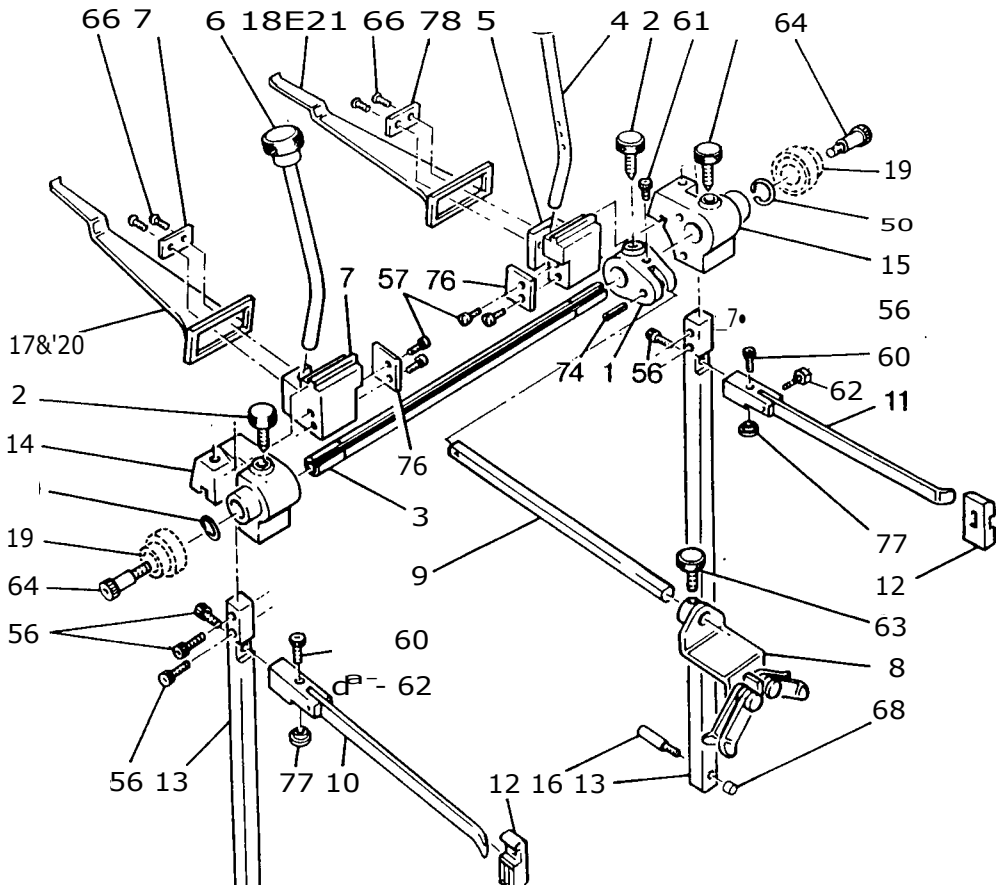

Index No.	Part No.	Equal to	Part	Serial
1	F146091	1076	Swivel Bracket	
2	F14G092	1246	Screw	
3*	F146313	226-3	Lifting Shaft	
4	F146094	1226	Blower - R.N.	
5	F146095	1196	Bracket - R.H. - not for Magazine Feed	
6	F146096	1326	Blower - L.H. -	
7	F146097	1286	Bracket - L.H. - not for Magazine Feed	
8	F146098	133G	Back Weight	
9*	F146314	23G-3	Shaft	
10	F14G100	2256	Side Arm - L.H. - complete with 60 and??	
11	F14G101	226G	Side Arm - R.H. - complete with 60 and??	
12	F14G102	3096	Side Fence	
13	E14F034		Feedboard Guide - L.H. and R.H.	
14	E14F053		Bracket - L.H. (not shown)	
15	E14F052		Bracket - R.N.	
16	E14F035		Support	
17	F146125	1516	Feed Guide - L.H.	
18	F146126	1526	Feed Guide - R.H.	
19	See 87-9			

* 313 Parts

50	LOCP008	(25)	CP8	Spring Clip	
56	M146002	(25)	0S16	Screw	10-24 UNC x $^5/_8$ in
57	M14J007	(10)		Screw	10-32 UNF x 7/16 in
59	LOOS017	(25)	0S17	Screw	10-24 UNC x 3/4 in
60	L005024	(25)	0S24	Screw	6-32 UNC x 1/2 in
61	M146007	(10)		Screw	8-32 UNC x 3/8 in
63	L005199	(5)	0S199	Screw	
64	L00S255	(10)	0S255	Screw	
66	L005200	(5)	OS200	Screw	
68	LOOT010	(5)	07010	Nut	5/16 in-18 UNC
74	LOCW562	(10)	CW562	Spring Dowel	1/8 in dia. x 3/4 in
76	LOOW080	(5)	0W80	Spring Plate	
77	LOOW082	(5)	0W82	Eccentric Nut	
78	LOO4083	(10)	0W83	Plate	

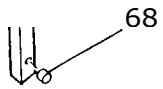

r.

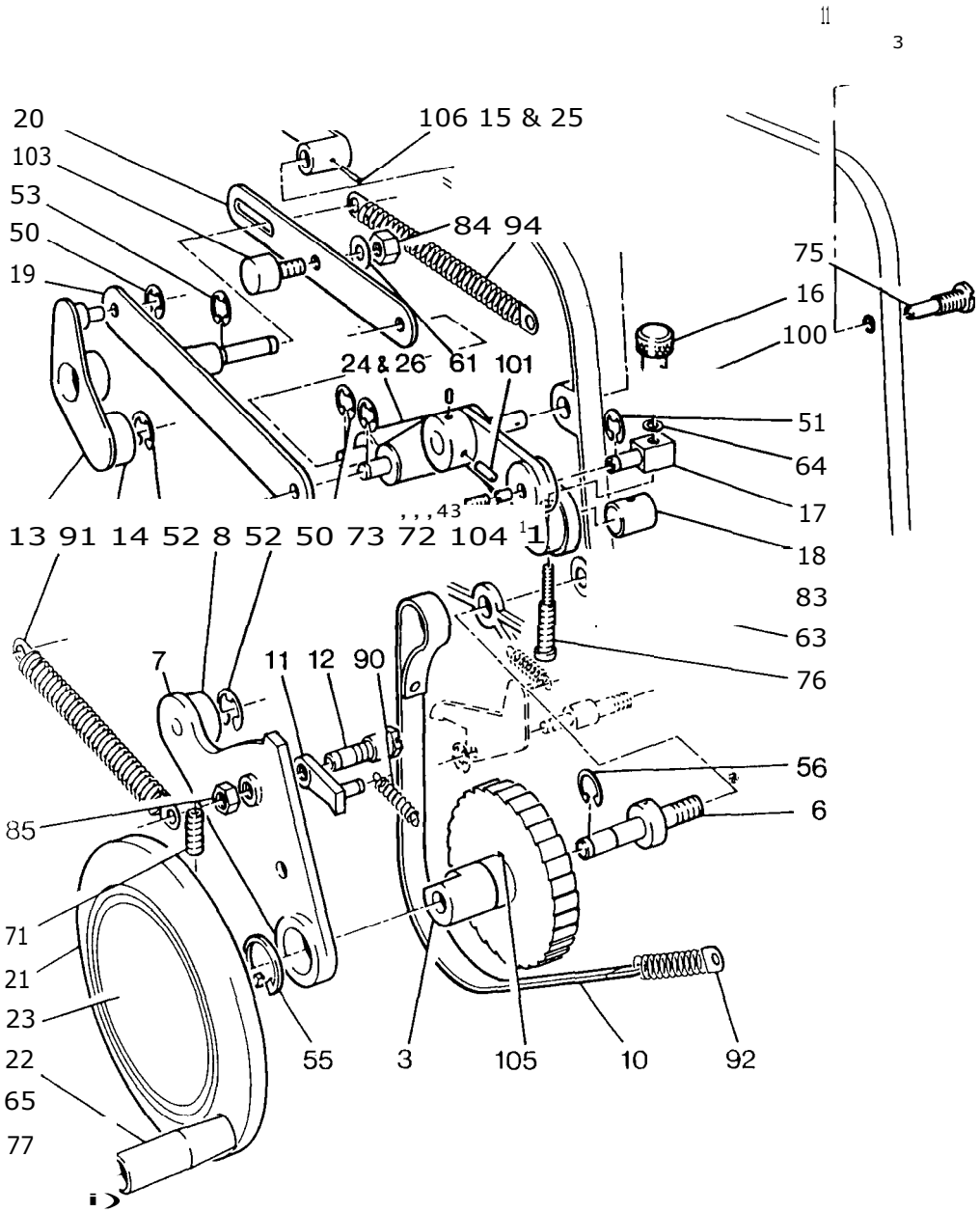

Index No.	Part No.	Equal to	Part	Serial N
3	F14G127	155G	Feedboard Lifting Gear and Ratchet Wheel	
6	F14G128	165G	Stud	
7	E14E090	159G	Lifting Plate	
8	E02S016	161G	Roller	
10	E14E059		Brake	
11	F14G132	162G	Lifting Pawl •	
12	F14G133	163G	Eccentric Screw	
13	E14E093	256G	Drive Arm - complete with 14, 52 and 62	
14	E02S018	215G	Roller	
15*	E14E102	24G-3	Height Control Bar	
16	F14G137	247G	Height Control Knob	
17	F14G138	252G	Stud	
18	F14G139	254G	Pin	
19	E14E048	2556	Operating Link	
20	F146141	258G	Trip Pawl Link	
21	E14L021		Handwheel - complete with 22, 23, 65, 71 and 77	
22	E14L023		Handle	
23	E05E302		Label	
24	F14G143	2996	Connecting and Operating Arm - Assembly complete with 101	
25*	See K5,1		Height Control Bar for Magazine Feed	
26	E14E039		Arm	

* 313 Parts

CR

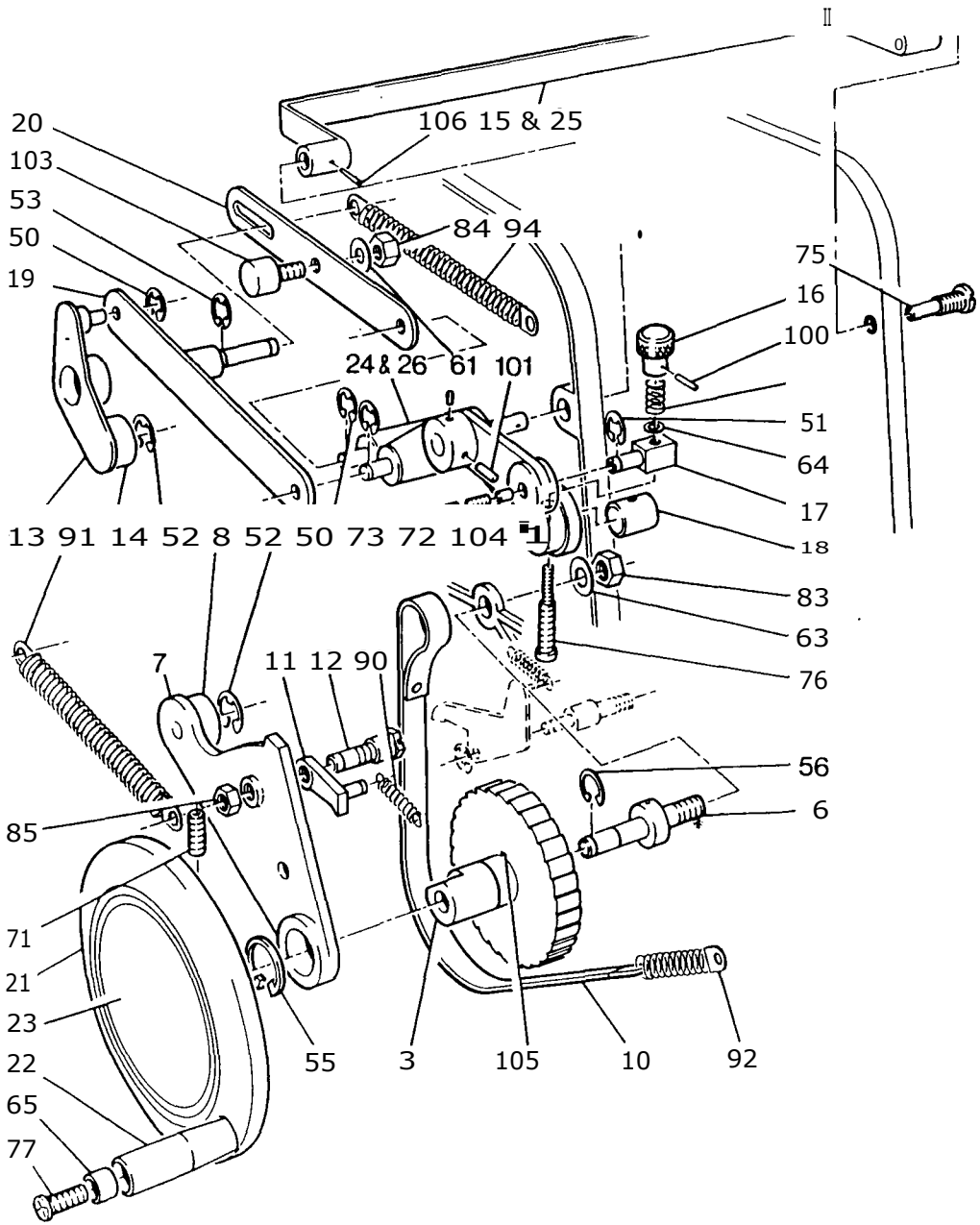

Index No.	Part No.		Equal to	Part		Serial
50	LOOP002	(2	iP2	Spring Clip		
51	LOOP003	(25)	OP3	Spring Clip		
52	L01P005	(10)	LP5,OP5	Spring Clip		
53	LOOP006	(25)	OP6	Spring Clip		
55	LOOP011	(25)	OP11	Spring Clip		
56	LOOP012	(25)	OP12	Spring Clip		
61	LOCR043	(25)	CR043	Washer		
63	LOOR013	(10)	OR13	Washer		
64	LOOR014	(25)	OR14	Washer		
65	P14L024	'(10)		Cup Washer		
71	LOOS022	(10)	OS22	Screw	3/8 in-16 UNC x 1/2 in	
72	LOOS168	(10)	OS168	Screw	10-32 UNF x 3/8 in	
73	LOCS386	(10)	CS386	Lock Screw	10-32 UNF x 1/8 in	
75	LOOS201	(5)	OS201	Pivot Screw		
76	LOOS202	(3)	OS202	Screw		
77	M14G001	(10)		Screw	10-32 UNF x 1/2 in	
83	LOOT018	(5)	OT18	Nut	1/2 in-13 UNC	
84	10CT076	(5)	C176	Nut	1/4 in-28 UNF	
85	M146006	(10)		Nut	1/4 in-28 UNF	
90	LOOU018	(25)	0018	Spring		
91	LOOU019	(10)	0019	spring		
92	LOOU020	(5)	0020	Spring		
93	LOOU021	(25)	0021	spring		
94	L001J022	(5)	0022	Spring		
100	LOCW035	(25)	CW35	Spring Dowel	3/32 in dia. x 3/8 in	
101	M14J005	(25)		Taper Pin	11/64 in x 3/4 in HT	
103	LOOW084	(3)	OW84	Eccentric Stud		
104	LOOW085	(10)	OW85	Plug		
105	LOOW020	(25)	OW20	Pin	1/8 in dia. x 3/8 in	
106	LOCW562	(10)	OW42,CW562	Pin	1/8 in dia. x 3/4 in	

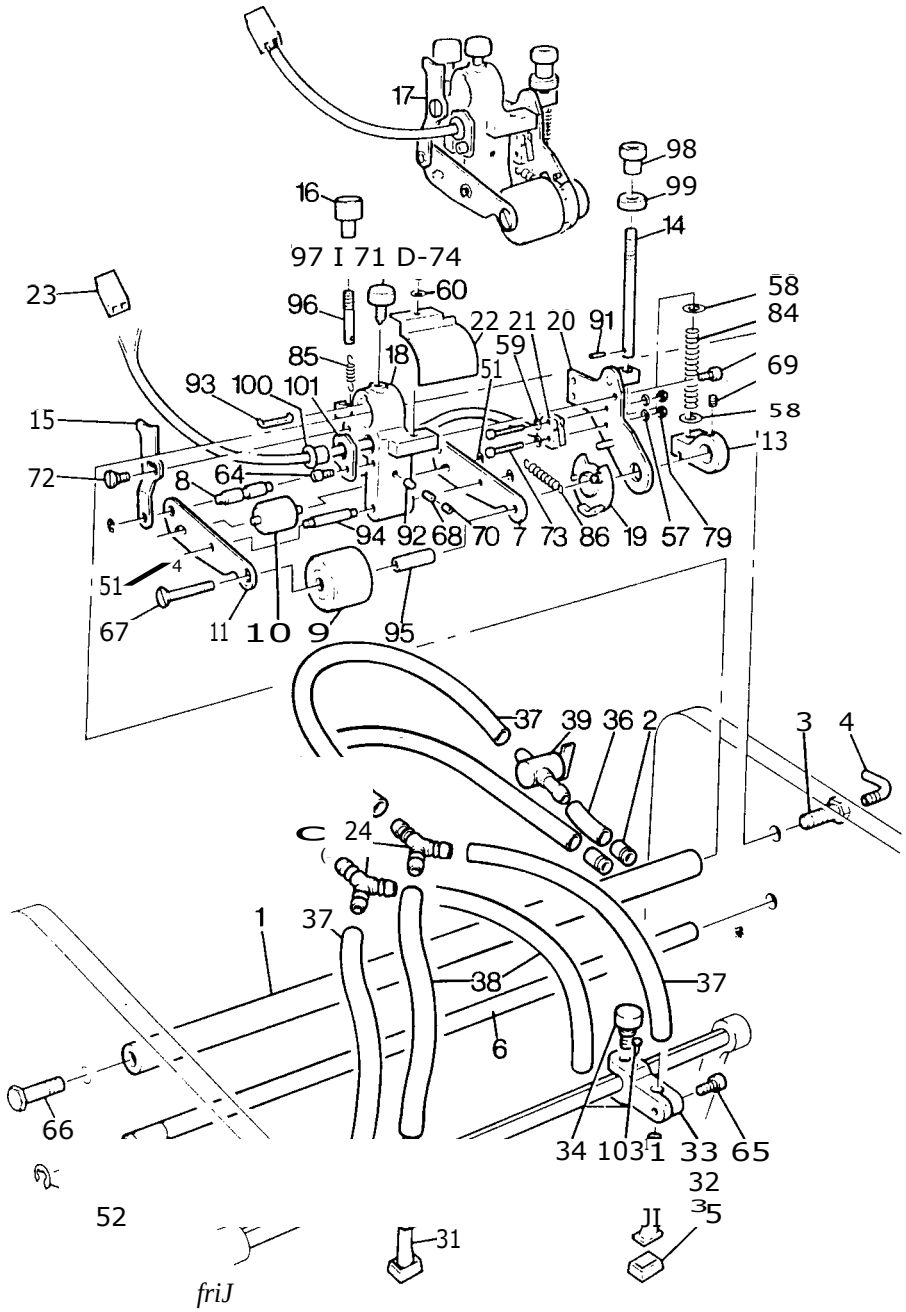

Index No.	Part No.	Equal to	Part	Serial No.
1*	E14E152		Vacuum Manifold Shaft	
2	F14H002	211	Air Pipe Connector	
3	F14H003	3H	Coupling	
4	F14H004	56H	Vacuum Connecting Tube	
5*	E14E153		Inner Sucker Hose 268mm (Old-style not shown) (10.1/2 in)	
6*	F1411304	411-3	Bottom Shaft	
7	F14H007	10H	Roller Arm - R.H.	
8	F14H008	12H	Top SpindLe	
9	F14009	1711	Roller	
10	F14H010	1911	Two Sheet Ejection Roller	
11	F14H011	20H	Roller Arm - L.H.	
13	F14H013	32H	Eccentric Arm	
14	F14H014	3411	Adjusting Spindle	
15	F14H015	45H	Latch	
16	F14H016	4311	Knob	
17	E14E067		Two Sheet Mounting Block - complete	
18	E14E060		Mounting Block only	
19	F14H018		Trigger Plate	
20	F14H019		Adjusting Plate	
21*	E14R204		Microswitch and Harness Assy.	
22	E14E061		Cover	
23	F14W027		Connector - 2 way	
24*	F1411301		Y-Hose Connector	
25*	E14E156		Distributor Sucker Hose 179mm (Old-style not shown) (7 in)	
			4 SUCKER SYSTEM	
30*	E14E173		4 Sucker System - complete with 2,24,31-39,65,103	From 1
31*	F14G014	20G	Sucker - L.H.	
32*	F14G015	21G	Sucker - R.H.	
33*	E14E143		Removable Holder	
34*	E14E158		Screw	
35*	E14E130	22%	Sucker	
36*	E14E154		First Outer Sucker Hose	
37*	E14E155		Second Outer Sucker Hose	
38*	E14E156		Distributor Sucker Hose	
39*	F14H305		Syphon Tap 1/4 in	

* 313 Parts

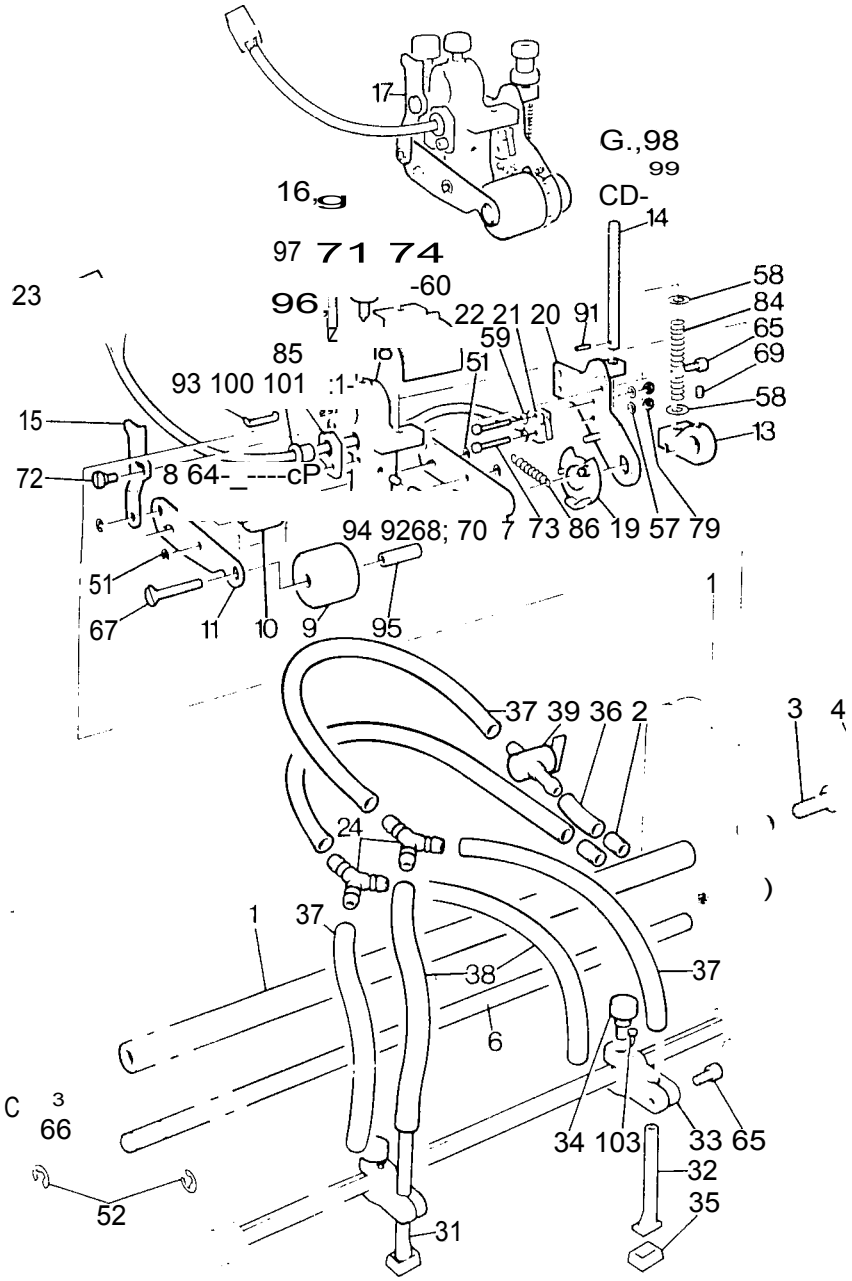

Index No.	Part No.	Equal to	Part		Serial No.
51	L00P006	5) OP6	Spring Clip		
52	LOOP011	(25) 0P11	Srring Clip		
57	LOCR139	(25) CR139	Lock Washer		
58	LOOR001	(25) OR1	Washer		
59	LOCR036	(25) CR36	Washer		
60	L0LR022	(10) LR22	Washer		
64	1005003	(25) 0S3	Screw	8-32 (INC x 3/8 in	
65	L00S009	(25) 0S9	Screw	10r-32 UNF x 1/2 in	
66	L00S061	(3) 0561	Screw – L.H.		
67	L005078	(5) 0S78	Screw		
68	L00S155	(10) 0S155	Screw	10-24 UNC x 3/16 in	
69	1005177	(10) 05177	Screw	8-32 (INC x 3/16 in	
70	L00S185	(10) 0S185	Lock Screw	10-24 UNC x 1/8 in	
71	M14H004	(5)	Screw	1/4 in-28 UNF x 3/8 in	From '
72	LOOS205	(10) 0S205	Screw		
73	L005028	(25) 06211	Screw	8 BA x 3/4 in	
74	LOCS419	(25) CS419	Screw	6-32 (INC x 1/4 in	
79	M14H002	(25)	Nut	8 BA	
84	L00U023	(10) 0U23	Spring		
85	L00U024	(10) 04J24	Spring		
86	LOOU025	(10) 0U25	Spring		
91	L00W023	(25) 0W23	Pin	3/32 in dia. x 1/2 in	
92	L00W085	(10) 0W85	Plug		
93	L00W086	(5) 0W86			
94	L0OW087	(5) 0W87	Bottom Spindle		
95	L00W088	(5) 0W88	Spindle		
96	L0OW089	(5) 0W89	Regulator Shaft		
97	P14E108	(5) 0W90	Guide		
98	LOOW091	(5) 0W91	Lock Knob		
99	L00W092	(5) 0W92	Adjusting Collar		
100	M14H001	(10)	Clamp		
101_	L00W193	(5) 0W193	Plate		
102	M14H003	(10)	Plug for 1 (Old-style not shown)		
103	P14E157	(5)	Pin		

r.R

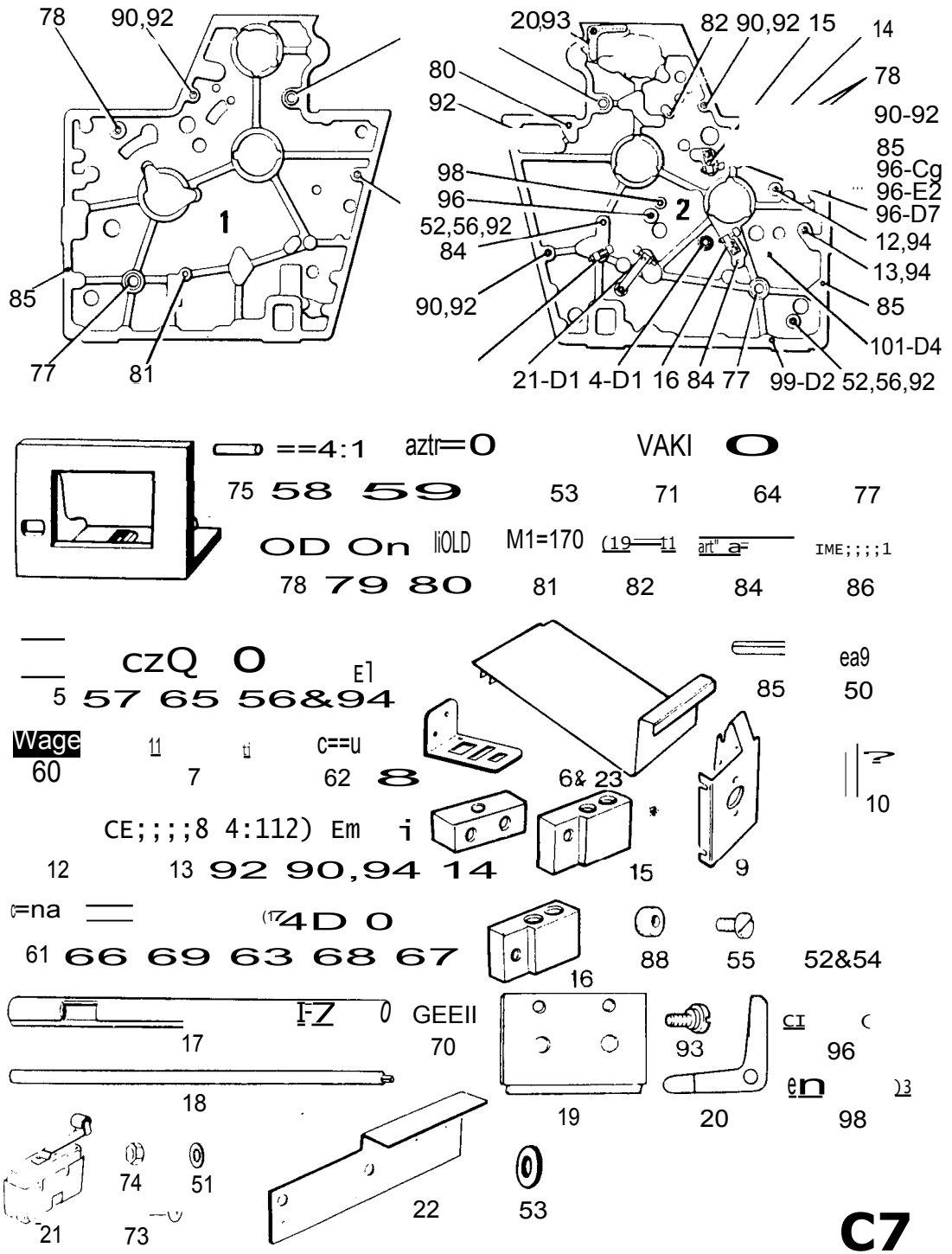

Index No.	Part No.	Equal to	Part		Serial N(
1	E14A103		Side Frame Sub Assembly R.H. complete as shc		
2	E14A082	14.1-2	Side Frame Sub Assembly L.H. complete as shown		
3*	F14J303	3J-3	Support for 1,2		
5	E14A129		Block for 2, See Index 2 D1		
6*	El4N196		Two Sheet Collecting Tray		
7	El4E037		Support for 6		
8	El4R198		Connector Bracket (Wiring Harness) for 1		
9	E10A454		Bracket for 2		
10	F14J006	.	Push Button for 9		
11	F14J007	281211250P	Microswitch for 10		
12*	F14J201	4J-2	Pivot Stud for 2, See Index 18 D1		
13*	F14J202	7J-2	Pivot Stud for 2, See Index 9,27 and 29 D3		
14	E14A127		Stop Block See Index 95 D7		
15	E14A130		Stop Block - Bottom See Index 16 El		
16	E14A131		Stop Block - Top See Index 23 D1		
17*	F14J305	5J-3	Spacer Tube for 1		
18*	E14A104		Blanket Cylinder Guard Rod		
19*	F14J302	2J-3	Paper Deflector for 3		
20	F14L006	28-L	Molleton Roller Link L.H.		
21	F14N033	510C-S	Cylinder Position Microswitch		
22	E14R103		Bracket for 21		
50	LOCP005	(25) CPS	Spring Clip for 7		
51	LOCR007	(25) CR7	Washer for 74		
52	LOOR003	(25) OR3	Washer for 56		
53	LOOR007	(25) OR7	Washer for 71		
54	LOCR153	(10) CR153	Washer for 55,62		
55	M14J007	(10)	Screw for 9	10-32 UNF x 7/16 in	
56	L005036	(10) OS33	Screw for 5,92	1/4 in-20 UNC x 1 in	
57*	P14A139	(5)	Screw for 5	1/4 in-28 UNF x 1.1/4 in	
58	L005055	(3) O555	Screw for 71	5/16 in-18 UNC x 2.3/4 in	
59	L00S057	(3) O557	Screw for 1,2,3	5/16 in-18 UNC x 1.1/4 in	
60	M14J002	(10)	Locking Screw for 6	10-24 UNC x 1.1/4 in	
61	LOOS017	(25) OS17	Screw for 14,15,16	10-24 UNC x 3/4 in	
62	LOOS015	(25) OS15	Screw for 7	10-24 UNC x 1/2 in	
63*	P14A140	(5)	Screw for 14,15,16	1/4 in-20 UNC x 1 in	
64	LOOT003	(10) 073	Nut for 71	5/16 in-18 UNC	
65	M14G006	(10)	Nut for 57	1/4 in-28 UNF	
66*	P14A141	(5)	Screw for 14	10-32 x 7/8 in	
67	LOHT050	(10) HT50	Lock Nut for 63	1/4 in-20 UNC	
68	LOOT008	(25) 018	Nut for 63	1/4 in-20 UNC	
69	L001023	(10) 0723	Nut for 66	10-32 UNF	
70	M14F002	(10)	Screw for 18	3/8 in x 16 UNC x 1.1/4 in	
71	LOOU026	(3) OU26	Cushion Spring for 1,2,3		
73	L005439	(10) CS439	Screw for 21	M3.5 x 30mm	
74	LOLT004	(25) LT4	Nut for 73	M3.5	
75	L004027	(10) OW27	Dowel Pin for 3	1/4 in dia. x 1.1/4 in	
77	L004093	(4) OW93	Bush for 1,2		
78	L004094	(4) OW94	Bush for 1,2		
79	LOOW095	(4) OW95	Bush for 1,2		
80	L004096	(10) OW96	Stud for 1,2		
81	L004097	(5) OW97	Spring Peg for 1		
82	L03W115	(5)	Spring Peg for 2		
84	L004104	(5) OW104	Spring Peg for 2		
85	L0C4823	(10) CW823	Spring Dowel for 2,6 3/16 in dia. x 1 in		
86	L004068	(5) OW63	Spring Peg for 1, See Index 87 D7		
88	M14J004	(5)	Spacer for 14		
90	L005034	(10) O534	Screw for 92	1/4 in-20 UNC x 3/4 in	
92	L004111	(3) OW111	Cover Stud for 1		
93	L00S237	(10) OS237	Screw for 20		
94	M14J008	(10)	Screw Tuflok for 12,13,96	1/4-20 UNC x 3/4 in	
96	L004106	(5) OW106	Stud for 2		
98	L034077	(5)	Peg for 2		

* 313 Parts

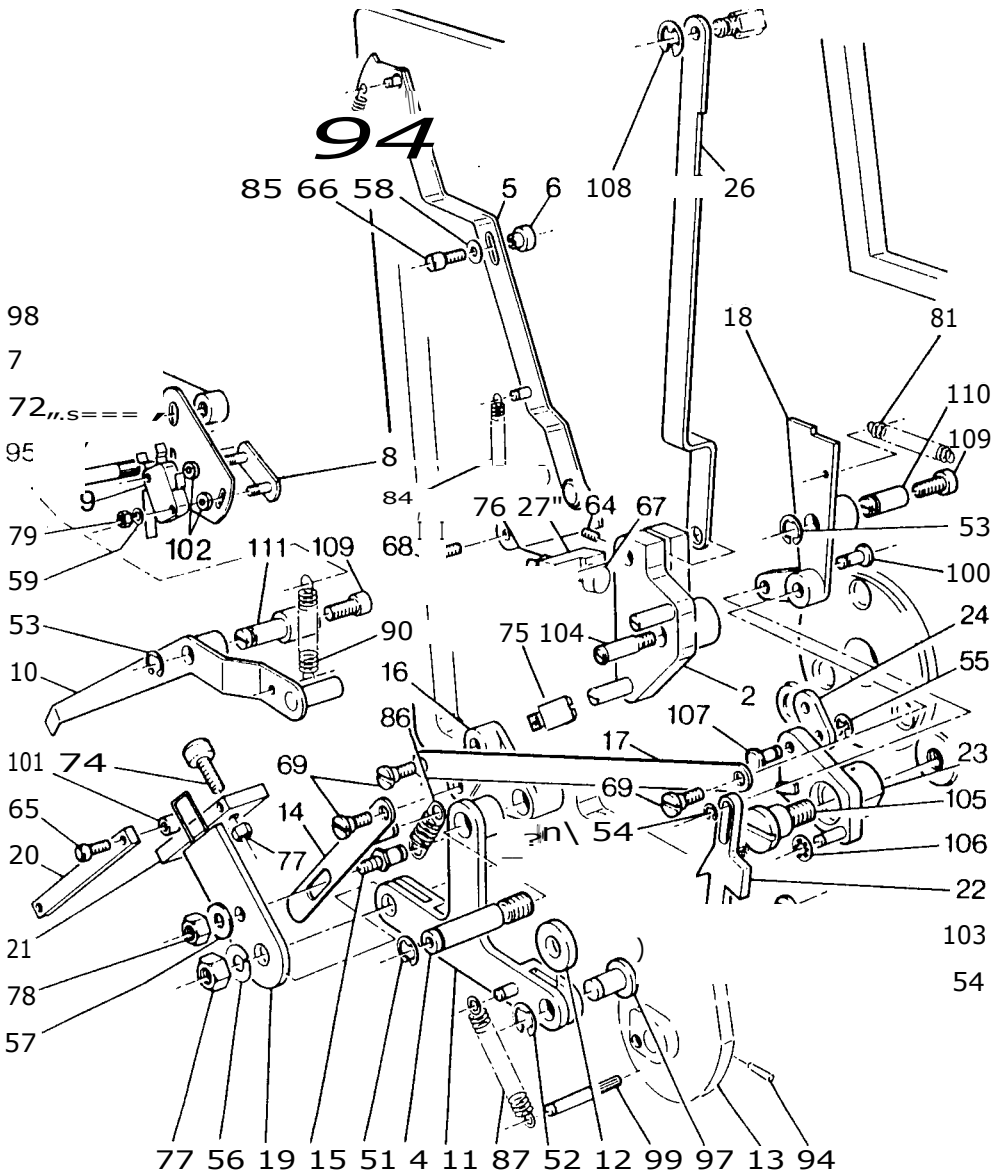

Index No.	Part No.	Equal to	Part	SerialNo
2*	E14A133		Blanket Eccentric Rocker	
4	F14K004		Stud — Tuflok	
5	F14K005		Inker Shut—off Link — complete	
6	F14K006	11K	Spacer	
7	E14R153		Plate	
8	E14R154		Bracket	
9	E14R301		Counter Microswitch	
10	E14M004		Switch Link	
11	F1414008	31K	Blanket Eccentric Pivot Arm	
12	F14K009	33K	Roller	
13	E14A018	95Q	Cam	
14	E14A060		Feeler Secondary Link	
15	F14K012	36K	Stud	
16	F14K013	4(	Pivot Bracket	
17	F14K014	44K	Feeler Primary Link	
18*	F14K207	7K-2	Feeler Swing Arm	
19*	E14A074	23K-2	Blanket Cylinder Push Bar	
20	F14K017		Retaining Block	
21	F14K018	50(	Support Block	
22*	F14K302	2K-3	Impression Shut—off Lever	
23*	E14A205		Impression Shut—off Plate	
24*	F14K205	20K-2	Link	
26*	E140047		Link	
27	See Index 5—C7		Stop Block	

* 313 Parts

ni

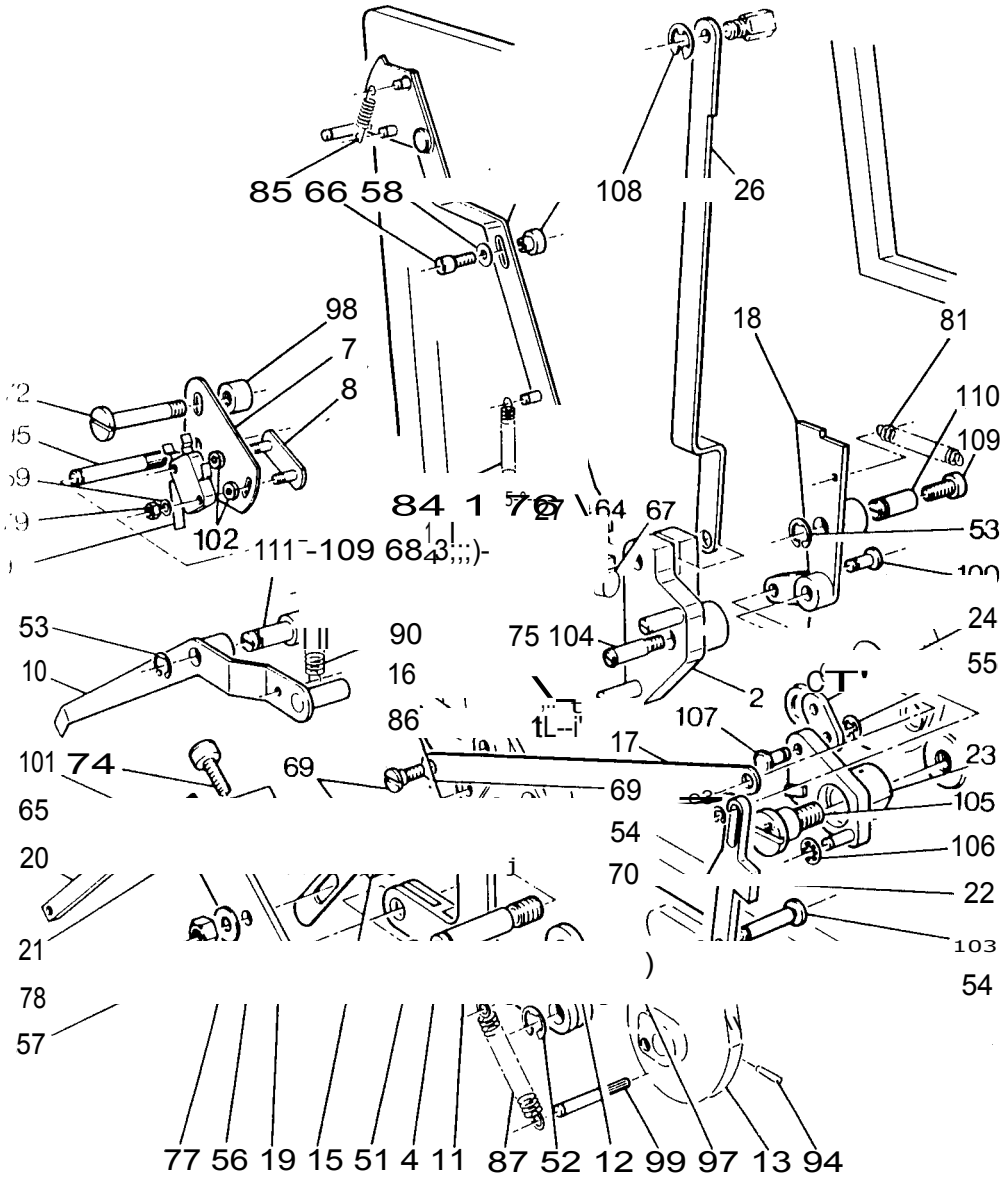

Index No.	Part N-	Equal to	Part		Serial No.
51	LOCPOuo (25)	CP6	Spring Clip		
52	LOLP005 (10)	LP5,OP5	Spring Clip		
53	LOOP003 (25)	OP3	Spring Clip		
54*	LOOP001 (25)	OP1	Spring Clip		
55*	LOOP006 (25)	OP6	Spring Clip		
56*	LOCR134 (25)	CR134	Washer		
57	LOOR008 (10)	OR8	Washer		
58	LOCR133 (10)	CR153,OR21	Washer		
59	M141(001 (10)		Washer		
64	LOOS178 (10)	OS178	Screw	8-32 UNC x 3/16 in	
65	M14G002 (25)	OS016	Screw	10-24 UNC x 5/8 in	
66	LOOS018 (25)	OS18	Screw	10-24 UNC x 7/8 in	
67	P14A139 (5)	OS52	Stop Screw	1/4 in-28 UNF x 1.1/4 in	
68	LOOS207 (10)	17S207	Screw		
69	L01E059 (10)		Screw		
70	LOOS225 (5)	OS225	Eccentric Screw		
71	P14A126 (5)		Stud		
72	10CS366 (10)	CS366	Screw	1/4 in-20 UNC x 3/4 in	
73*	LOOS228 (10)	OS228	Stud - old-style (not shown)		
74*	P14A139 (5)		Stop Screw	1/4 in-28 UNF x 1.1/ 4 in	
75	LOCS305 (25)	C5305	Microswitch Operating Screw	1/4 in-28 UNF x 1/2 in	
76	M14G006 (10)		Nut		
78	LOOT023 (10)	OT023	Nut	10-32 UNF	
79	LOCT072 (25)	CT72	Nut	4-40 UNC	
80	LOCT076 (5)	C176	Half Nut	1/4 in-28 UNF	
81*	LOOU080 (5)	OU80	Spring		
84	LOOU013 (10)	OU013	Spring		
85	LOOU028 (10)	OU028	Spring		
86	LOOU032 (10)	OU032	Spring		
87	LOOU033 (10)	OU033	Spring		
90	L04A123 (10)		Spring		
94	LOOW003 (25)	OW3	Taper Pin	11/64 in x 7/8 in	
95	L03W077 (5)		Spring Peg		
97	LOOW113 (5)	OW113	Pin		
98	E02J128 (5)		Spacer		
99	LOOW099 (5)	OW99	Spring Peg		
100*	LOOW199 (5)	OW199	Stud		
101	M14K003 (5)		Spacer		
103*	LOO4200 (10)	OW200	Stud		
104	L01E055 (4)		Stud	Tuflok	
105	L01E060 (3)		Pivot Screw	Tuflok	
106	M141(006 (10)		Push-on Fix		
107	P14A177 (5)		Stud		
108	LOCP004 (25)	CP4	Spring Clip		
109	M14J008 (10)		Screw Tuflok 1/4 in-20 UNC x 3/4 in		
110	LOOW107 (5)	OW107	Stud		
111	LOOW106 (5)	OW106	Stud		

* 312/313 Parts

* 312/313 Parts

no

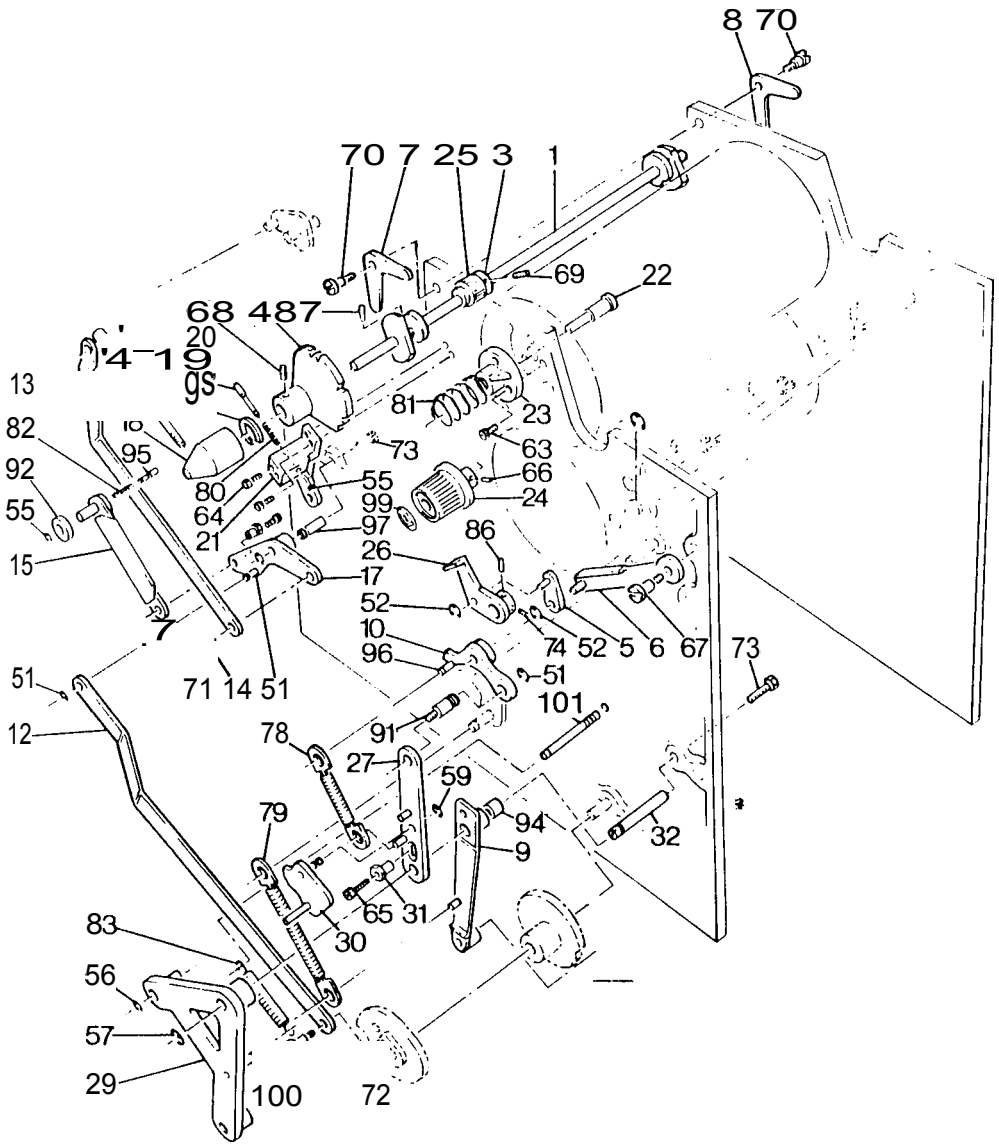

Index No.	Part No.	Equal to	Part
1*	F14L301	1L-3	Dampening and Ink Forme Roller Cam Shaft
3	F14L003	70L	Sleeve
4	F14L004	3L	Position Plate
5	F14L005	16L	Link
6	E14A016	18L	Link
7	F14L006	28L	Molleton Roller Link - L.H.
8	F14L007	29L	Molleton Roller Link - R.H.
9	E14A096	2L-2	Arm - bottom
10	E14A023	38L	Feeler Pawl
12	F14L009	55L	Inker Water Link
13	F14L010	65L	Water Ductor Link
14	F14L011	66L	Eccentric Nut
15	F14L012		Ink Ductor Link
17	F14L013	69L	Yoke
18	E14L028		Hub
19	E14L034	73L	Lever
20	E14L029		Handle
21	E14J023		Plunger Bracket
22	F14L014	77L	Plate Cylinder position Key
23	F14L015	76L	Flange
24	E14K001		Knob - complete with 66 and 99
25	E14H115		Idler Gear
26	E14A029	1L-2	Lever
27	E14D012		Arm
29	F14K203	12K-2	Cam Follower and Detector Arm - complete
30	E14A063	82L	Safety Spring Lever
31	E05J015		Eccentric
32	F14J202	7J-2	Pivot Stud

* 313 Parts

Serial 1

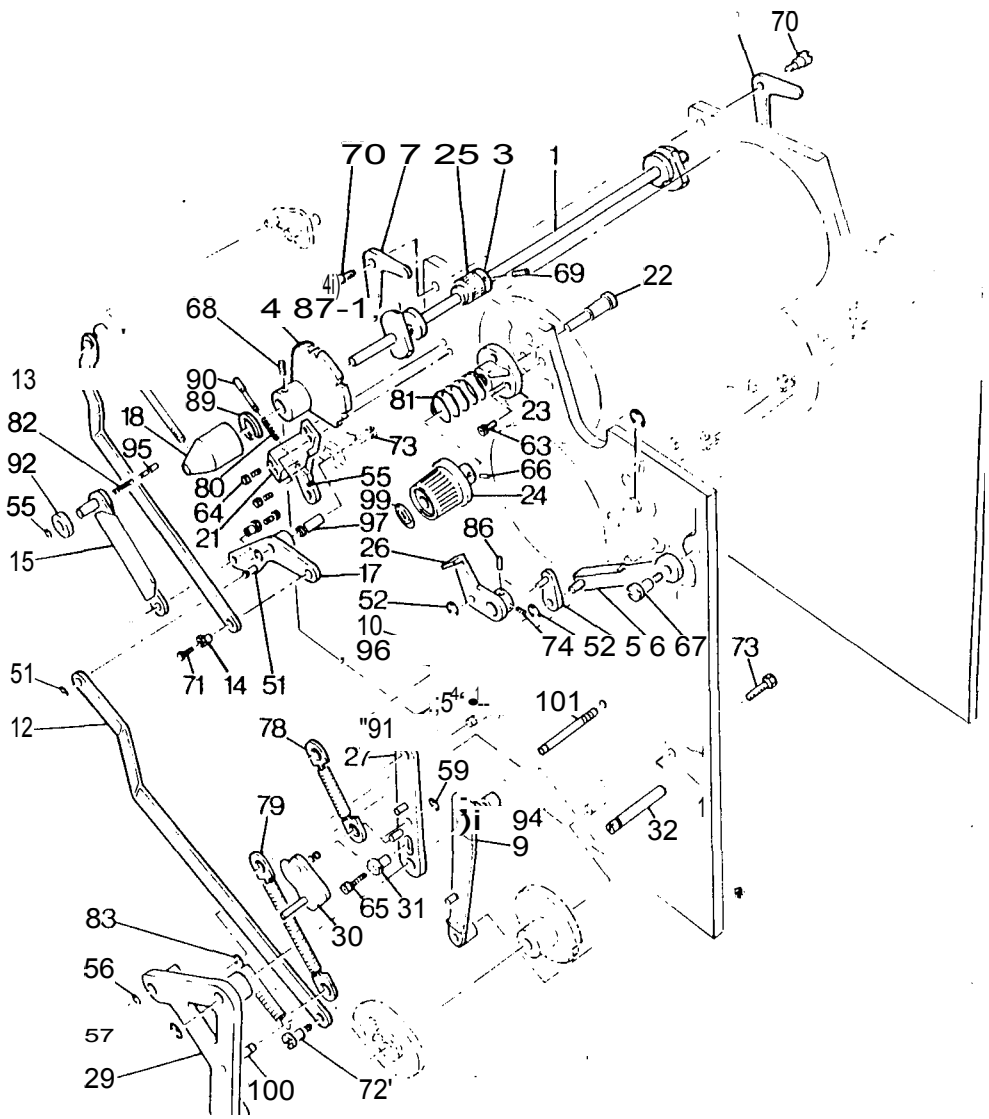

Index No.	Par NC		Equal to	Part		Serial No.
51	LOOP005	(25)	0P5	Spring Clip		
52	LOOP006	(25)	0P6	Spring Clip		
55	M14R004	(25)		Spring Clip		
56*	LOOP001	(25)	OP1	Spring Clip		
57	LOOP003	(25)	0P3	Spring CLip		
58	LOLP004	(25)	LP4	Spring Clip		
63	M146002	(25)	0S16	Screw	10-24 UNC x 5/8 in	
64	M14J011	(25)		Screw	10-24 UNC x 7/8 in Tuflok	
65	L00S034	(10)	0S34	Screw	1/4 in-20 UNC x 3/4 in	
66	L00S162	(25)	0S162	Screw	1/4 in - 28 UNF x 3/8 in	
67	L01E058	(5)		Screw		
68	L00S252	(10)	0S252	Screw	1/4 in-20 UNC x 5/16 in	
69	L0CS399	(10)	0S261,CS399	Screw	10-32 UNF x 3/16 in	
70	L00S237	(10)	0S237	Screw		
71	M14J010	(10)		Screw	8-36 UNF x 5/8 in Tuflok	
72	L01E057	(10)		Screw	Tuflok	
73	M14J008	(10)		Screw	1/4 in-20 UNC x 3/4 in Tuflok	
74	L00S175	(10)	0S175	Screw	8-32 UNC x 1/8 in	
78	LOOU013	(10)	0U13	Spring		
79	L00U022	(5)	0U22	Spring		
80	L00U035	(25)	0U35	Spring		
81	L00U036	(2)	0U36	Spring		
82	L00U037	(5)	0U37	Spring		
83	LOOU081	(5)	0U81	Spring		
86	LOCW024	(25)	CW24	Spring Dowel	1/8 in dia. x 5/8 in	
87	L0O4006	(25)	0(46	Taper Pin	3/16 in x 7/8 in	
89	L0OW114	(20)	0W114	Retaining Clip		
90	P14J032	(5)		Plunger		
91	L0OW116	(4)	0(4116	Stud		
92	L0O4117	(5)	0W117	Knob		
94	LOOW119	(5)	0(4119	Bush		
95	L0O4215	(5)	0(4215	Plunger		
96	L03J025	(5)		Stud		
97	L0O4105	(5)	0W105	Stud		
99	L05E281	(5)		Labe		
100*	LOO4201	(10)	0W201	Stud		
101*	L0OW198	(10)	0W198	Spring Peg		

* 313 Parts

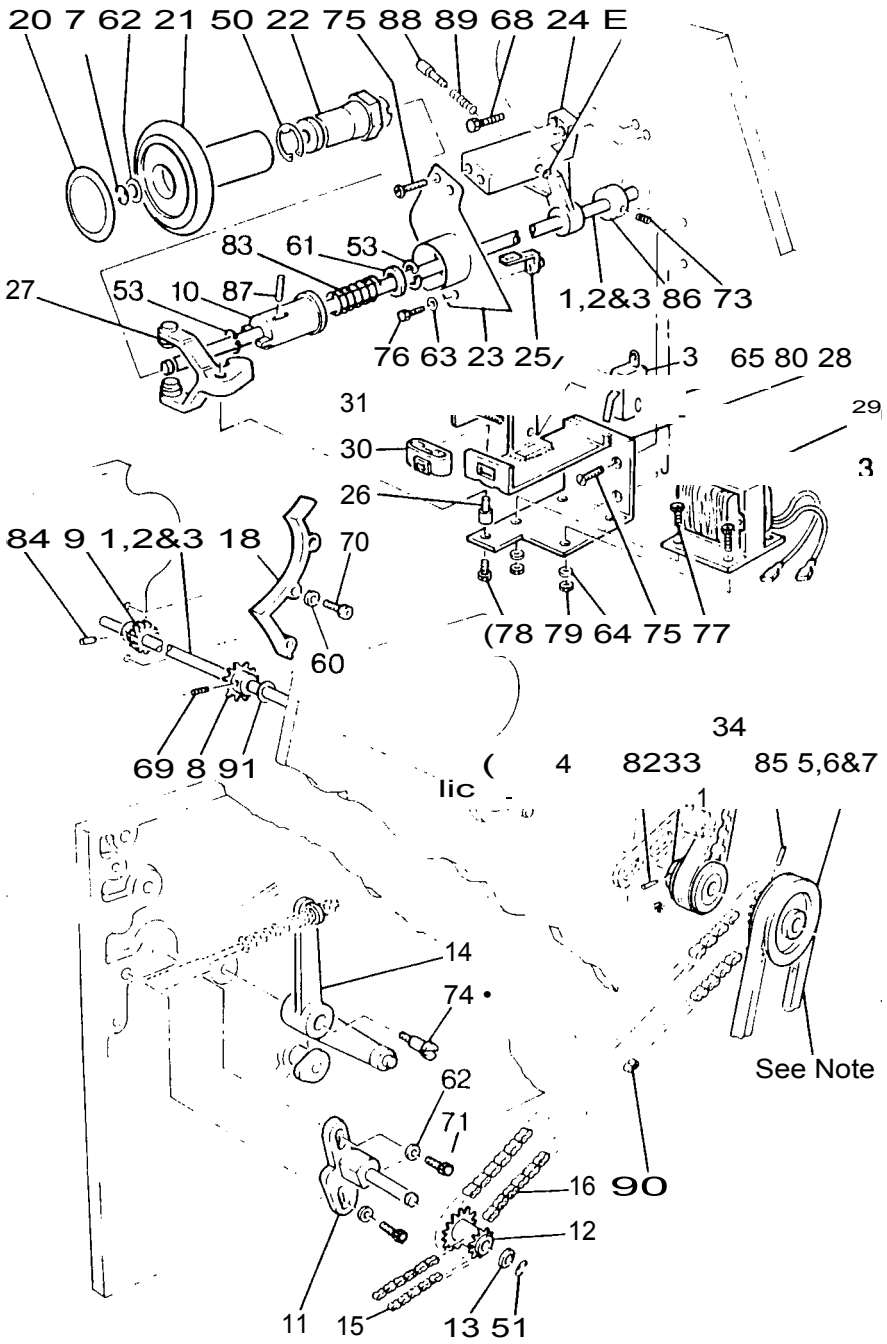

Index No.	Part No	Equal to	Part	Serial No,
1*	E14J041		Drive Pulley and Sprocket Shaft Assembly 40 Hz - complete with 9,33,84 and 85	
2*	E14J042		Drive Pulley and Sprocket Shaft Assembly 50 Hz - complete with 9,33,84 and 85	
3*	E14J043		Drive Pulley and Sprocket Shaft Assembly 60 Hz - complete with 9,33,84 and 85	
4*	E14J040		Shaft	
5*	E14J065		Pulley and Sprocket	60 Hz
6*	E14J011	96R	Pulley and Sprocket	40 Hz
7*	E14J010	97R	Pulley and Sprocket	50 Hz
8	F14R001	911Z	Main Drive Sprocket	
9.	E14J053		Gear - part drilled	
10	E14J018		Clutch Coupling	
11	E14A053	11R	Adjusting Plate	
12	F14R003	13R	Intermediate Sprocket	
13	F14R004	15R	Collar	
14	E14A013	17R	Conveyor Jogger Cam Lever	
15*	F14R301	2R-3	Chain with 90	
16	F14R006	20R	Chain with 90	
18*	F14R302	82R	Gear Guard	
19	E14J039		Handwheel Assembly - complete shown as 21, 22 and 50	
20	E05E278		Label	
21	E14J038		Handwheel	
22	E14J035		Clutch Insert	
23	E14N101		Cover Plate	
24	E14J023		Plunger Bracket	
25	E14J028		Friction Pad Assembly	
26	E14J031		Pivot Post	
27	E14J025		Thrust Lever Assembly	
28	E14J019		Bracket	
29	E14R197		Solenoid 22-29V 50/60 Hz	
30	F14A007	Al 3P	Locking Insert	
31	E14R154		Bracket	
32	F14J007	28121125OP	Microswitch	
33*	E14J068	3R-2	Pulley - part drilled	
34*	F14R202	5R-2	Belt	

* 313 Parts

Note: The 'V' Belts for items 5,6 and 7 are shown on 82

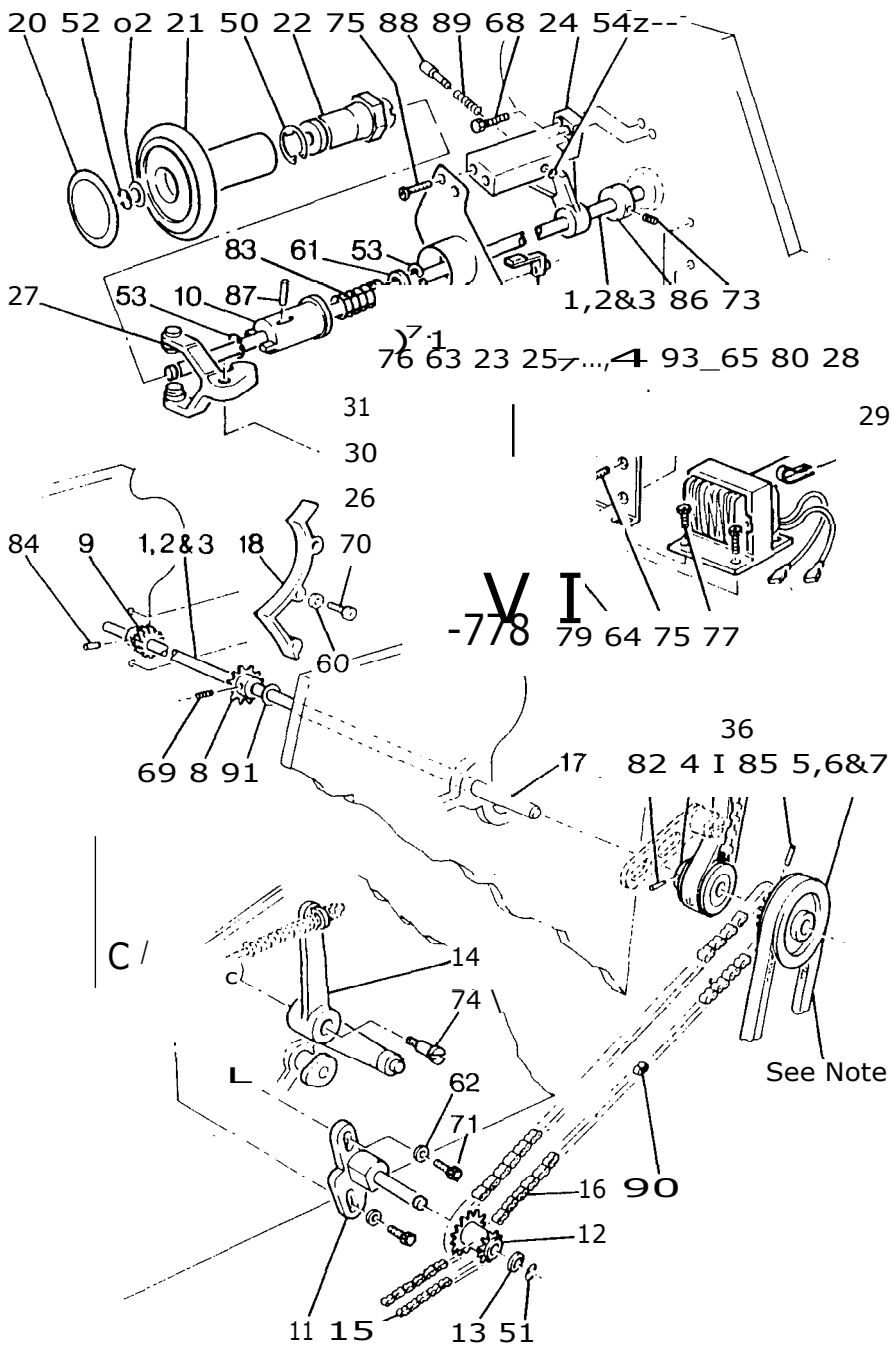

Index No.	Part No.		Equal to	Part		Serial
50	M14R001	(25)		Spring Clip		
51	LOOP002	(25)	OP2	Spring Clip		
52	LOLP004	(25)	LP4	Spring Clip		
53	LOCP006	(25)	CP6	Spring Clip		
54	M14R004	(25)		Spring Clip		
60	LOCR153	(10)	CR153,OR21	Washer		
61	L02A084	(10)		Washer		
62	LOOR003	(25)	OR3	Washer		
63	L00R025	(10)	OR25	Washer		
64	LOOR015	(10)	OR15	Washer		
65	LOLR008	(25)	LR8	Washer		
68	LOOS018	(25)	0518	Screw	10-24 UNC x 7/8 in	
69	M14J014	(10)		Screw	10-32 UNF x 3/16 in Tuflok	
70	LOOS009	(25)	OS9	Screw	10-32 UNF x 1/2 in	
71	L00S036	(10)	0536	Screw	1/4 in-20 UNC x 1 in	
73	LOOS171	(10)	0S171	Screw	1/4 in-20 UNC x 1/4 in	
74	L01E053	(5)		Screw	Tuflok	
75	L005073	(10)	OS73	Screw	10-24 UNC x 1/2 in	
76	LOOS003	(25)	053	Screw	8-32 UNC x 3/8 in	
77	LOCS419	(25)	CS419	Screw	6-32 UNC x 1/4 in	
78	L0CS343	(25)	CS343	Screw	6-32 UNC x 3/8 in	
79	M14R002	(25)		Nut	6-32 UNC	
80	L0C1072	(25)	CT72	Nut	4-40 UNC	
82*	M14R007	(25)		Taper Pin HT 11/64 in (No.1) x 1.1/4 in		
83	L04E067	(5)		Spring		
84	M14J005	(25)		Taper Pin HT 11/64 in x (No. 3/4 in		
85*	M1441002	(25)		Taper Pin HT 3/16 in x 1 in (Black)		
86	L0044141	(3)	0W141	Collar (2 screw fixing)		
87	M14R008	(10)		Grooved Pin	3/16 in x 1.1/4 in	
88	P14J032	(5)		Plunger		
89	L00U035	(25)	0U35	Spring		
90	LOCW704	(5)	CW704	Link		
91	L02J131	(5)		Spacer		
93*	LOLW083	(10)	LW83	P-Clip		

* 313 Parts

np

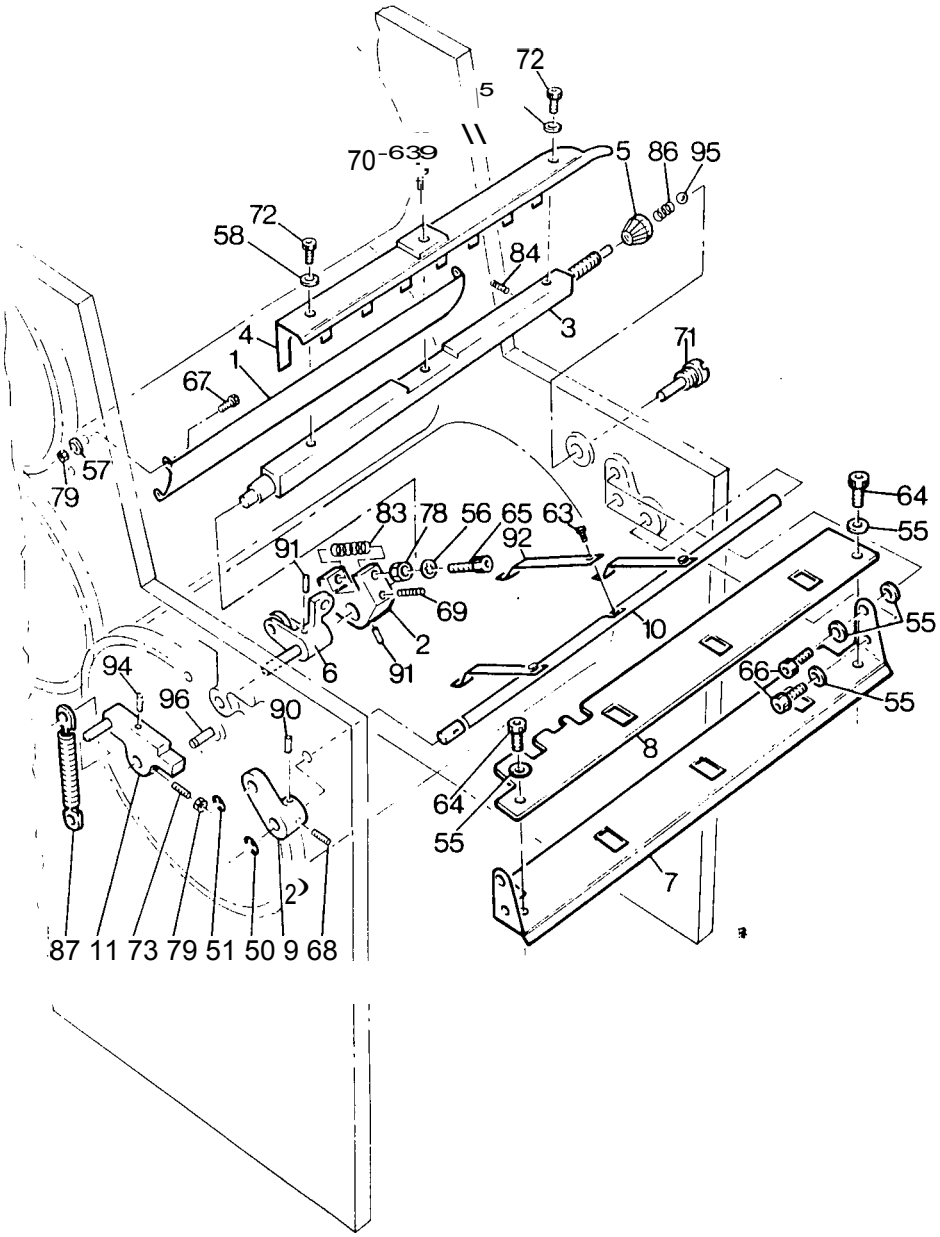

Index No.	Part No.		Equal to	Part	Serial
1*	F !04		5R-3	Guard	
2	F...031			Adjusting Arm	
3*	F14R305			Shaft	
4*	F14R306			Paper Stop	
5	F14R033		42R	Adjusting Collar	
6	F14R204		10R-2	Operating Arm	
7*	E144087		9R-3	Paper Platform	
8*	F14R310		10R-3	Paper Deft--tor	
9	E144029		1L-2	Lever	
10*	F14R309		11R-3	Feeler Spindle	
11	E14A138			Lever	
12*	F14R311			Paper Stop Assembly complete with 3,4 and 5	
50	LOOP005	(25)	0P5	Spring Clip	
51	LOOP006	(25)	0P6	Spring Clip	
55	L00R022	(10)	0R22	Washer	
56	LOCR003	(25)	CR3	Lock Washer	
57	LOCR153	(10)	CR153,0R21	Washer	
58	LOOR001	(10)	0R'S	Washer	
63	M14R009	(25)		Screw Tuflok	8-32 UNC x 1/4 in
64	LOOS009	(25)	0S9	Screw	10-32 UNF x 1/2 in
65	14A009	(25)	0S10	Screw	10-32 UNF x 5/8 in
66	LOOS015	(25)	0515	Screw	10-24 UNC x 1/2 in
67*	LOOS017	(25)	0S17	Screw	10-24 UNC x 3/4 in
68	L005175	(10)	0S175	Screw	8-32 UNC x 1/8 in
69	M14R005	(10)		Screw Tuflok	8-32 UNC x 1/4 in
70	L01E054	(5)		Screw Tuflok	
71	M14J006	(5)	9R-2	Pivot Screw	
72	L00S280	(5)	0S280	Screw	10-32 UNF x 3/8 in
73*	LOCS411	(4)	CS411	Adjusting Screw	10-24 UNC x 1/4 in
78	LOOT011	(10)	0111	Nut	10-32 UNC x 3/16 in
79*	LOHT052	(10)	H152	Lock Nut	10-24 UNC
83	L00U045	(25)	0U45	Spring	
84	L00U046	(25)	0U46	Spring	
86	L00U083	(10)	0U83	Spring	
87	L00U084	(10)	0U84	Spring	
90	LOCW024	(25)	CW24	Spring Dowel	1/8 in dia. x 5/8 in
91	L004041	(25)	0W41	Spring Dowel	1/8 in dia. x 11/16 in
92	LOOd142	(10)	0042	Feeler	
94	L004005	(10)	0W5	Taper Pin	No.2 x 3/4 in
95	L004203	(5)	0W203	Steel Ball	
96	L004068	(5)	0W68	Spring Peg	

* 313 Parts

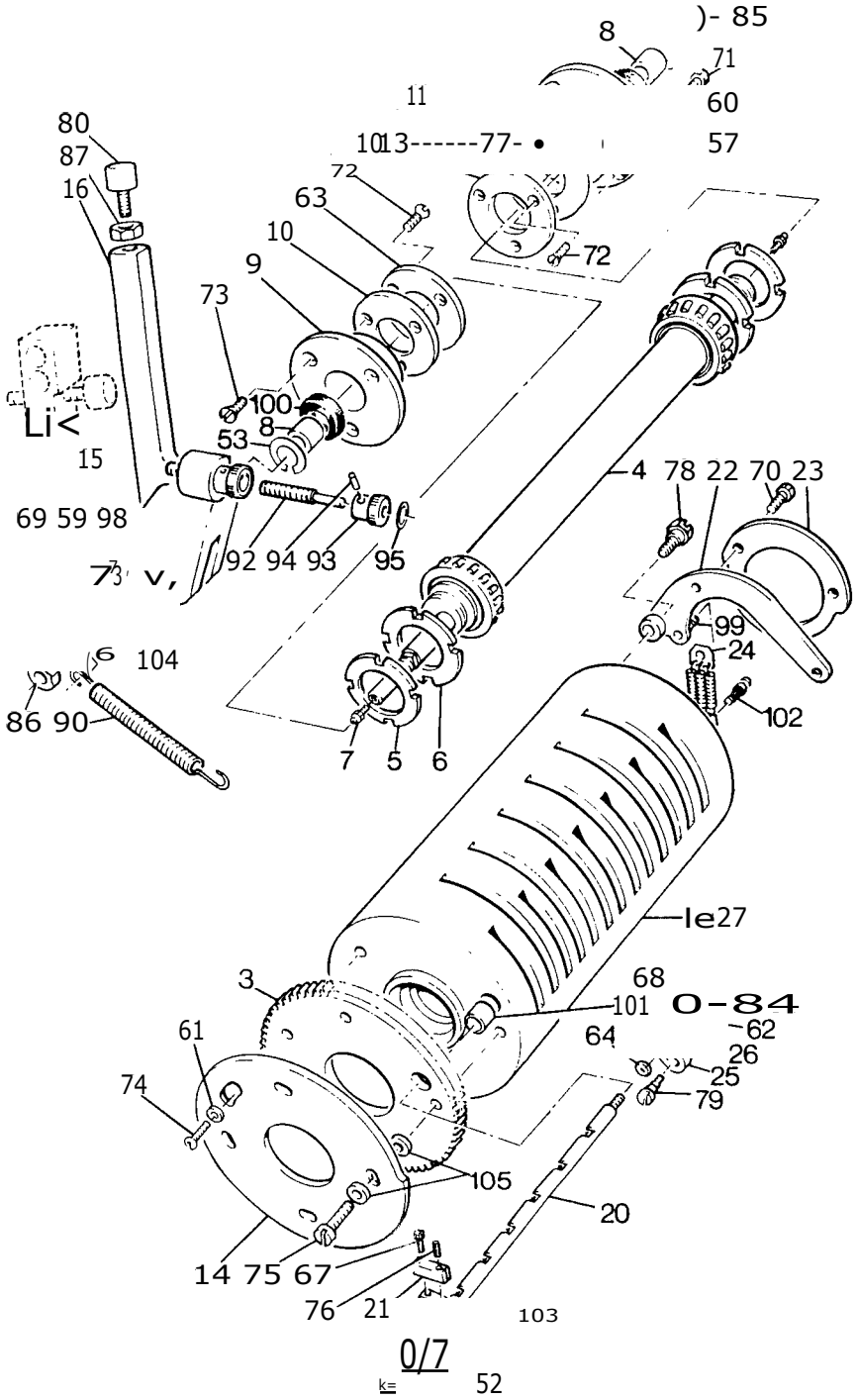

IMPRESSION CYLINDER

El

Index No.	Part No.	equal to	Part	Serial No.
1*	F141I301		Cylinder - complete with 3,14, 20-22,24-26,75,78,79,102 and 103	
3*	F14M302	6M-3	Gear	
4*	E14D033		Shaft - complete with Taper and Self-aligning Bearings	From 16D554
5	F1411030	3C1	Ring Nut	
6	F14M005	31M	Lock Nut	
7	F14M006	50M	Grease Nipple	
8	F14M007	7811	Sleeve	
9	F1411008	611-2	Retainer - L.H.	
10	F14N013	75M,50N	Retaining Plate - L.H.	
11	F1411010	72M	Retainer - R.H.	
13	F1411012	7611	Retaining Plate - R.H.	
14*	E14D037	1M-2,10M-3	Paper Stop Cam	
15*	See Index 15 - C7		Stop Block (not shown)	
16*	F1411201		Throw Off Block	
20*	F1411303	8M-3	Gripper Shaft	
21	F1411020	2311	Support	
22*	E14A078	311-3	Gripper Lever	
23	F1411021	2511	Cam	
24*	F1411304	1411-3	Spring Unit	
25*	F1411305	511-3	Gripper Arm	
26*	F1411306	13M-3	Sleeve	
27*	F1411307	211-3	Cylinder	

* 313 Parts

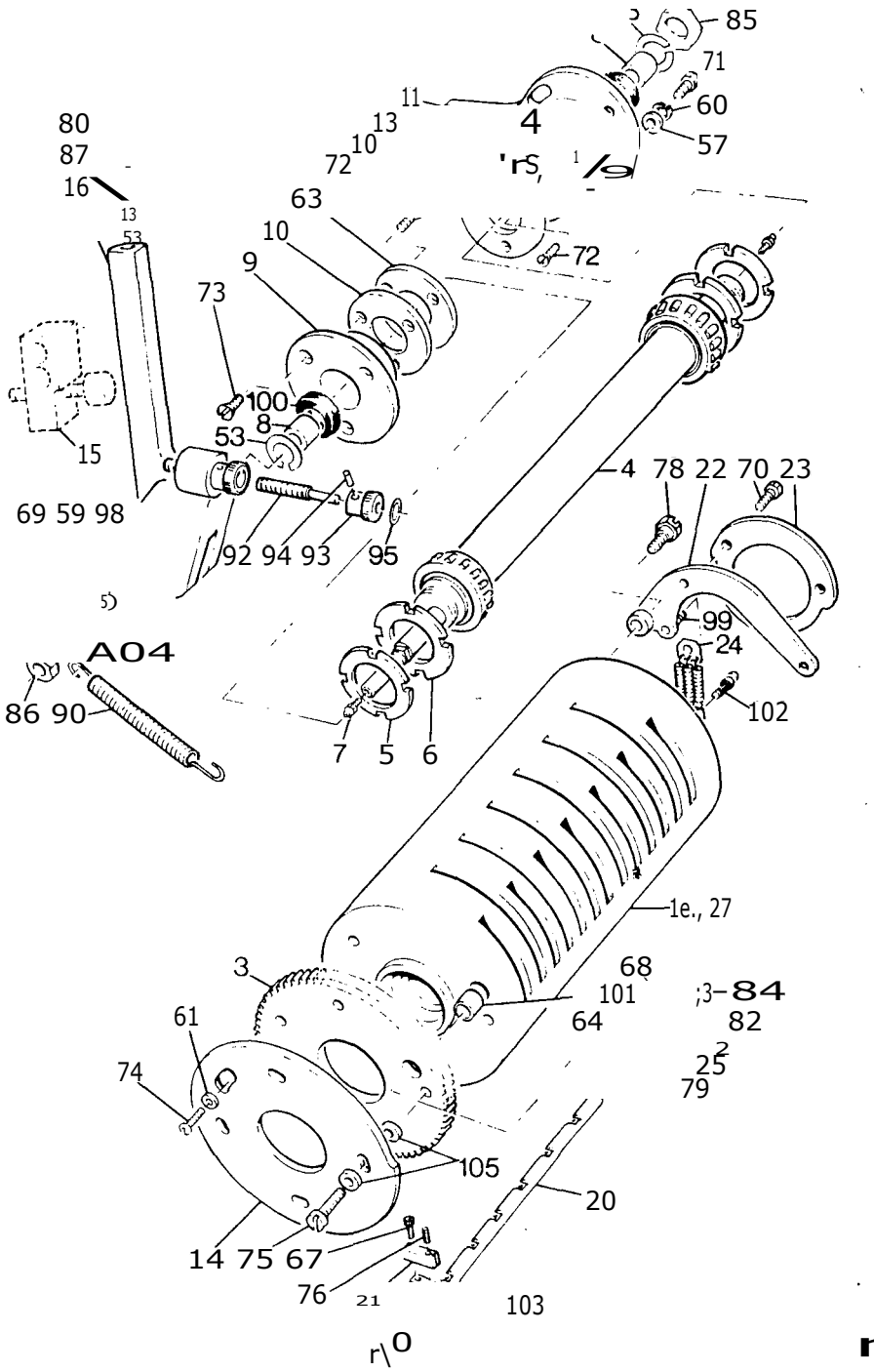

IMPRESSION CYLINDER E2

Index No.	Part No.	Equal to	Part	No.
52	L00P014 (25)	0P14	Spring Clip	
53	L00P015 (25)	0P15	Spring Clip	
57	L00R003 (25)	0R3	Washer	
59	L00R018 (10)	0R18	Washer	
60	L0CR134 (25)	CR134	Lock Washer	
61	L00R025 (25)	0R25	Washer	
62	L00R067 (25)	0R67	Lock Washer	
63	L00R078 (10)	0R78	Shim Washer	
64	L00R084 (10)	0R84	Shim Washer	
67	L00S004 (25)	0S4	Screw	8-32 UNC x 1/2 in
68	L01A042 (10)		Screw	8-32 UNC x 3/4 in Tuflok
69	M14N008 (25)		Screw	1/4 in-20 UNC x 1/2 in Tuflok
70	L00S033 (25)	0S33	Screw	1/4 in-20 UNC x 5/8 in
71	L00S034 (10)	0S34	Screw	1/4 in-20 UNC x 3/4 in
72	L00S076 (25)	0S76	Screw	8-32 UNC x 3/8 in
73	M14M001 (10)		Screw	1/4-20 UNC x 1/2 in
74	L005098 (10)	0S98	Screw	8-32 UNC x 5/8 in
75	L00S124 (10)	0S124	Screw	
76	L00S181 (10)	05181	Adjusting Screw	8-36 UNF x 3/8 in
78*	L01E065 (5)		Screw	
79*	L00S248 (5)	748	Screw	
80*	P14A142 (5)		Screw and Cap	10-32 x 3/4 in
84	M14M008 (10)		Nut	8-32 UNC
85	L001020 (5)	0720	Nut	11/16 in - 24 NS
86	L001025 (10)	0125	Nut	7/16 in - 32 NS
87*	L00T023 (10)	0723	Nut	10-32 UNF
90*	L00U082 (5)	0U82	Spring	
92	L00W129 (5)	0W129	Spindle	
93	L00W128 (5)	0W128	Knob (drilled one side)	
94	L001030 (25)	0W30	Spring Dowel 1/16 in dia. x 7/16 in	
95	L05E380 (10)		Label	
98	L00W120 (3)	0W120	Segment	
99	L00W121 (10)	0W121	Stud	
100	P140054 (4)		Felt Collar	
101	L00W125 (5)	0W125	Bearing	
102*	L00W126 (5)	0W126	Stud	
103	L00W216 (4)	0W216	Gripper Finger	
104*	P140046 (10)		Stud Tuflok	
105	L02J028 (5)		Spacer	

* 313 Parts

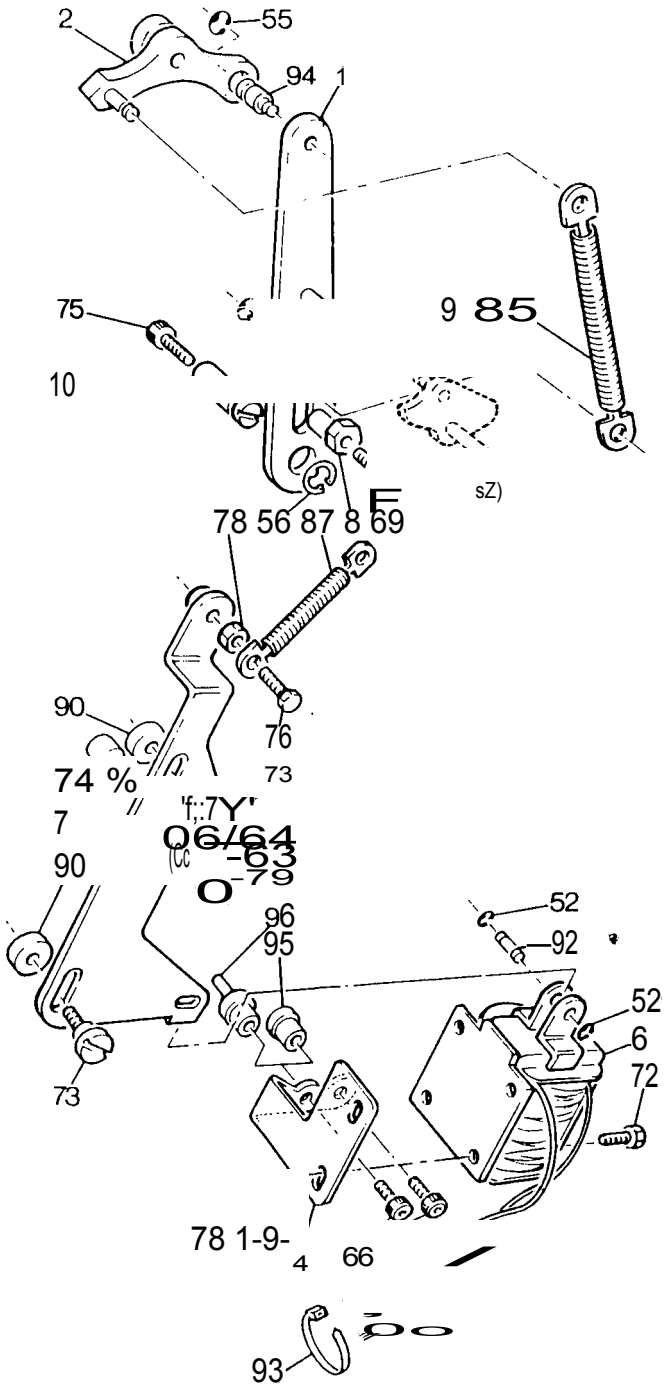

Index No.	Part No		Equal to	Part		Serial No.
1*	E14D012			Arm		
2	E14A023		38L	Feeler Pawl		
4*	E14D023			Bracket		
5*	E14D027			Cover		
6	E14R218			Solenoid		
7*	E14D028			Slide Plate		
8	E05J015			Eccentric		
9*	See D3-10			Safety Spring Lever		
10*	F14J202		7J-2	Pivot Stud		
52	LOCP009	(25)	CP9	Spring Clip		
55	LOOP005	(25)	0P5,LP5	Spring Clip		
56	LOCP003	(25)	CP3	Spring Clip		
59*	LOCR007	(25)	a1 r	Lock Washer		
63*	LOCR003	(25)	CR3	Lock Washer		
64*	L00R008	(10)	0R8	Washer		
66*	LOOS015	(25)	0515	Screw	10-24 UNC x 1/2 in	
69	L00S034	(10)	0S34	Screw	1/4 in-20 UNC x 3/4 in	
72*	L0CS343	(25)	CS343	Screw	6-32 UNC x 3/8 in	
73*	L01E062	(10)		Screw		
74*	L01E052	(5)		Screw		
75	M14J008	(10)	0S35	Screw	1/4 in-20 UNC x 3/4 in Tuflok	
76	LOCS420	(10)	CS420	Screw	8-32 UNC x 5/8 in	
78*	1001030	(10)	0730	Nut	6-32 UNC	
79*	M14M009	(10)		Nut	10-32 UNC	
85	LOOU013	(10)	0U13	Spring		
87*	L04A146	(5)		Spring		
90*	L02J152	(4)		Spacer		
91	L0CW538	(5)	CW538	Insulator - not shown		
92	L035211	(5)		Peg		
94	LOOW116	(4)	0W116	Stud		
95	M1411012	(4)		Bush (Machines with Chain Pile Delivery)		
96	See F5-19			Stud		

* 313 Parts

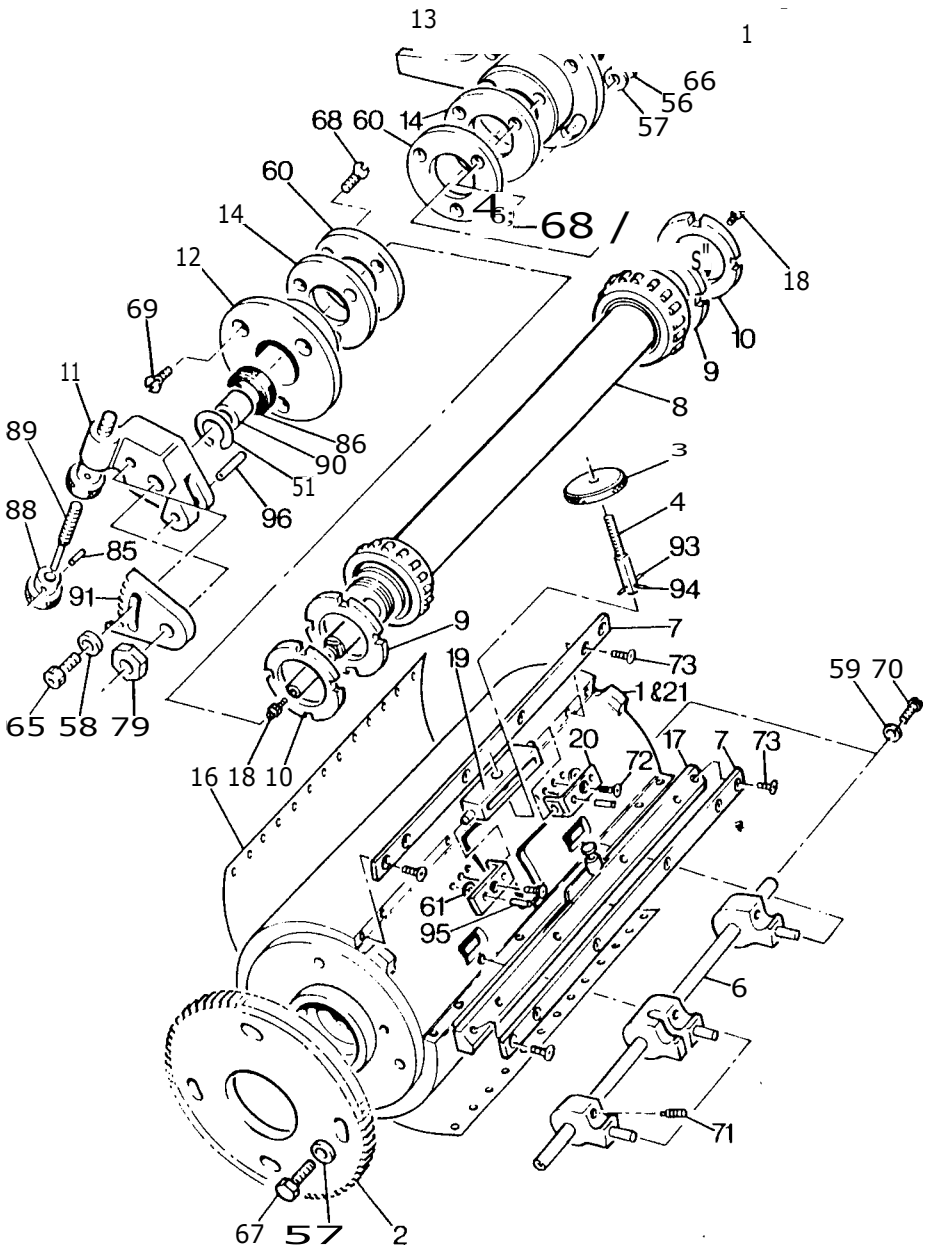

Index No.	Part No.		Equal to	Part	''erial No.
1*	F14N301			Cylinder - complete with 2-4,6,7,17,19-21	
2*	F14N302		3N-3	Gear	
3	F14N201		10N-2	Tension Wheel	
4	F14N202		11N-2	Screw	
6*	F14N303		4N-3	Tension Shaft - complete	
7*	F14N304		6N-3	Clamp	
8*	E14C005 "			Shaft - complete with Taper and Self-aligning Bearings	From 16D554
9	F14M030		30M	Ring Nut	
10	F148005		31M	Lock Nut	
11	F14N205		20N-2	Adjusting Link	
12	F14N206		5N-2	Retainer - L.H.	
13	F14N207		68=2	Retainer - R.H.	
14	F14N013		75M,50N	Plate	
16*	F14N305		7N-3	Blanket (Black)	
17*	F14N306		5N-3	Retaining Bar	
18	F14M006		50M	Grease Nipple	
19*	F14N203		14N-2	Support	
20*	F14N204		15N-2	Bracket	
21*	F14N307		2N-3	Cylinder	
51	LOOP015	(25)	0P15	Spring Clip	
56	LOCR134	(25)	CR134	Lock Washer	
57	LOOR003	(25)	0R3	Washer	
58	LOOR018	(10)	0R18	Washer	
59	LOCR153	(10)	CR153	Washer	
60	L00R078	(10)	0R78	Shim Washer	
61*	L00R053	(10)	0R53	Spacer	
65	M14N008	(25)		Screw Tuflok	1/4 in-20 UNC x 1/2 in
66	L005034	(10)	0S34	Screw	1/4 in-20 UNC x 3/4 in
67	L005372	(10)	CS372	Screw	1/4 in-20 UNC x 5/8 in
68	L00S076	(25)	0S76	Screw	8-32 UNC x 3/8 in
69	814M001	(10)		Screw	1/4 in-20 UNC x 1/2 in
70*	M14P012	(10)		Screw	10-32 UNF x 3/8 in
71	L00S231	(10)	0S231	Screw	
72*	L0CS363	(10)	CS363	Screw	10-24 UNC x 1/2 in
73*	LOOS014	(25)	0S14	Screw	10-24 UNC x 3/8 in
78	LOOT020	(5)	0720	Nut	
79	LOOT025	(10)	0725	Nut	7/16 in-32 NS
85	10OW030	(25)	0W30	Spring Dowel	1/16 in dia. x 7/16 in
86	P14D054	(4)		Felt Collar	
88	L0OW128	(5)	0W128	Knob	
89	L00W129	(5)	0W129	Spindle	
90	L0OW130	(5)	0W130	Sleeve	
91	L004120	(3)	0W120	Segment	
93*	LOCW024	(25)	CW24	Spring Dowel	1/8 in dia. x 5/8 in
94*	LOCW036	(25)	CW36	Spring Dowel	3/32 in dia. x 5/8 in
95*	L0HW377	(5)	HW377	Spring Dowel	1/8 in dia. x 1/2 in
96*	L00W027	(10)	0W27	Dowel	1/4 in dia. x 1.1/4 in

* 313 Parts

FA

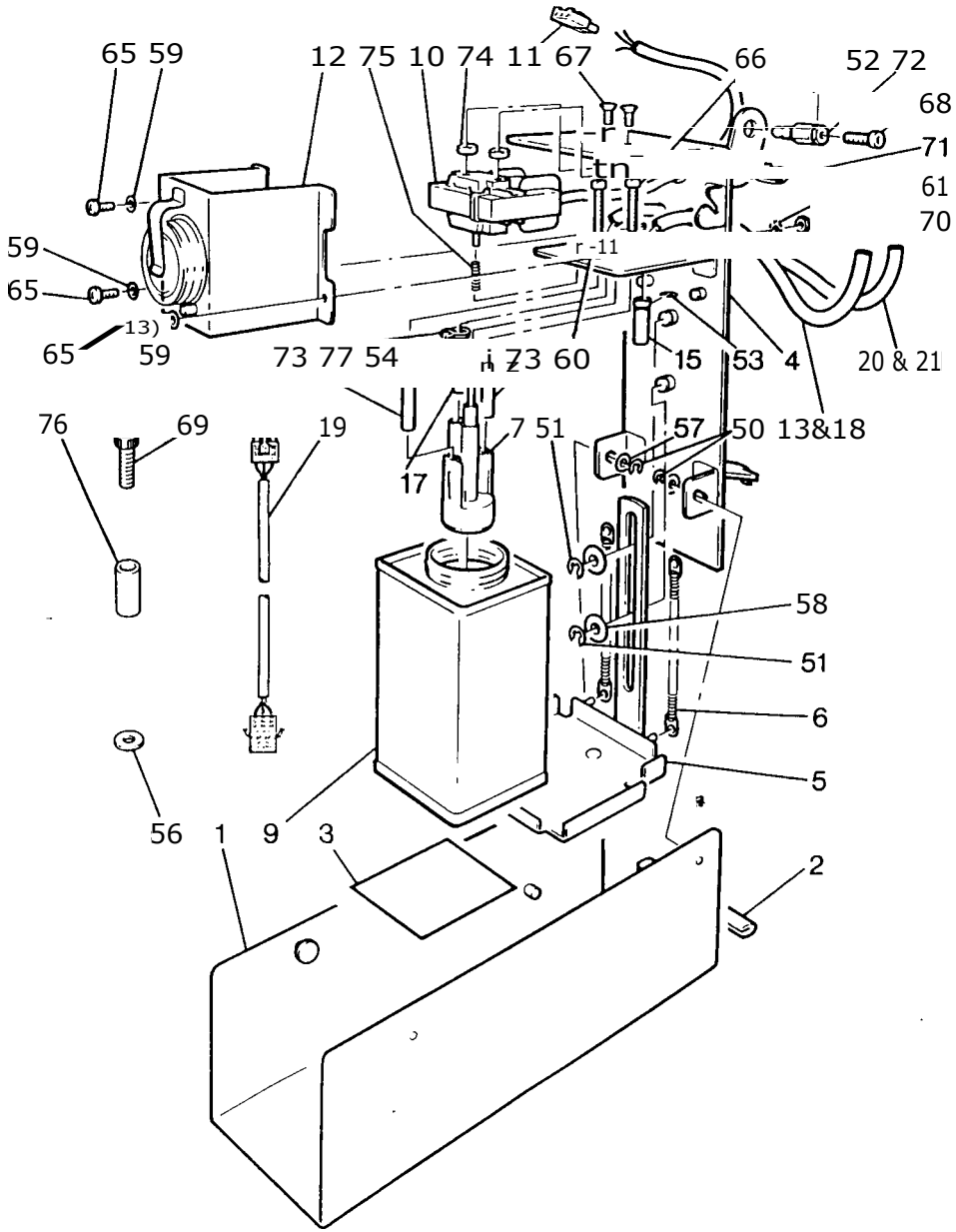

Index No.	Part No.		Equal to	Part		'terial No.
1	E10F089			Front Cover		
2	E10F046		910F046F99	Edging Strip		
3	F14N017		3003RT	Label		
4	E10F085			Back Panel		
5	E10F088			Support		
6	E04A080		804A080J99	Spring		
7	F14N018			Pump		
9	E10F025		910F025W99	Reservoir		
10	E10F110			Motor	24V 50/60 Hz	
11	F14E026			Plug		
12	E10F086			Motor Cover		
13	E10F041		910F041C99	Pipe	10 in	
15	E10F033		910F033199	Pipe Connector		
17	E10F115		---- Pipe Connector			
18	E10F055			Pipe	20 in CPD	
19	E14R235			Pump Extension Harness CPD		
20	E10F116			Pipe	7 in	
21	E10F117			Pipe	20 in CPD	
50	LOCP003	(25)	CP3	Spring Clip		
51	LOCP004	(25)	CP4	Spring Clip		
52	M14N001	(25)		Spring Clip		
53	LOCP005	(25)	CP5	Spring Clip		
54	LOCP013	(25)	CP13	Spring Clip		
56	L02A079	(10)		Washer		
57	LOCR051	(25)	CR51	Washer		
58	L02A057	(4)	802A057M99	Washer (plastic)		
59	LOHR010	(10)	HR10	Washer		
60	LOHR023	(25)	HR23	Lock Washer		
61	LOHR017	(25)	HR017	Lock Washer		
62	LOCR134	(25)	CR134	Spring Washer for 68 (not shown)		
65	LOLS015	(10)	LS15	Screw	M4 x 10Mm	
66	M14N005	(5)	222711061P	Bolt	M3 x 35mm	
67	LOHS009	(25)	HS9	Screw	M4 x 12mm	
68	L005036	(10)	0S36	Screw	1/4 in-20 UNC x 1 in	
69	M14P013	(5)		Screw	1/4 in-20 UNC x 2.1/4 in	
70	LOLT005	(25)	LT5	Nut	M4	
71	LOHW104	(10)	HW104	Ty-rap		
72	P10E010	(3)	910E010F99	Stud		
73	L02J084	(4)	802J084Q99	Spacer		
74	L02J085	(10)	802J085L99	Spacer		
75	L04A140	(5)		Drive Spring		
76	P10F092	(5)		Spacer Tube CPD		
77	M13Y006	(5)		Clamp		

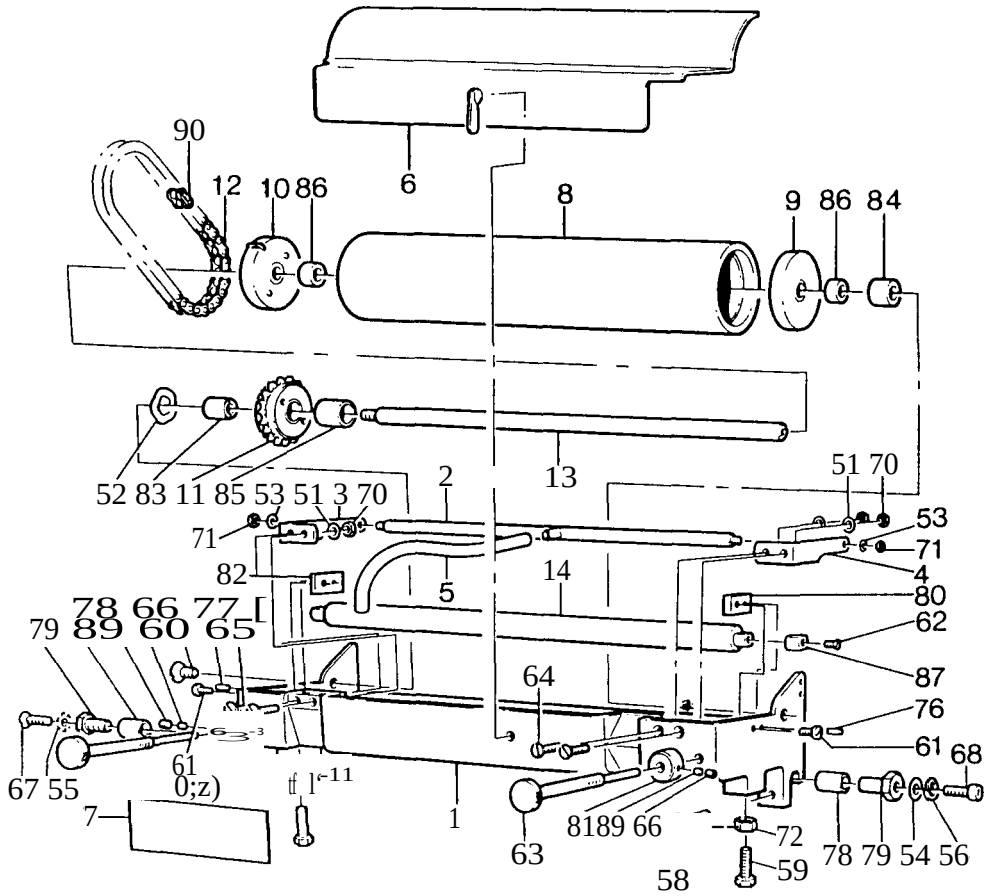

Index No.	Part No.	Equal to	Part	Serial No.
1*	E10F123		Trough	
2*	E10F126		Spray Tube	
3	E10F026	910F026R99	Bracket – R.H.	
4	E10F027	910F027M99	Bracket – L.H.	
5*	E10F125		Hose	
6*	E10F129		Trough Cover	
7	E05E253		Label	
8*	F14N308	624N-3	Cleaning Roller – Sponge	
9	E10F078	625N	Hub – L.H.	
10*	F14N311	626N-3	Hub – R.H.	
11	E10F060	630N	Sprocket	
12	F14N021	682N	Chain (39 links) with 90	
13*	F14N309	641N-3	Shaft	
14*	F14N310	634N-3	Wiper Roller – complete with 62 and 87	

* 313 Parts

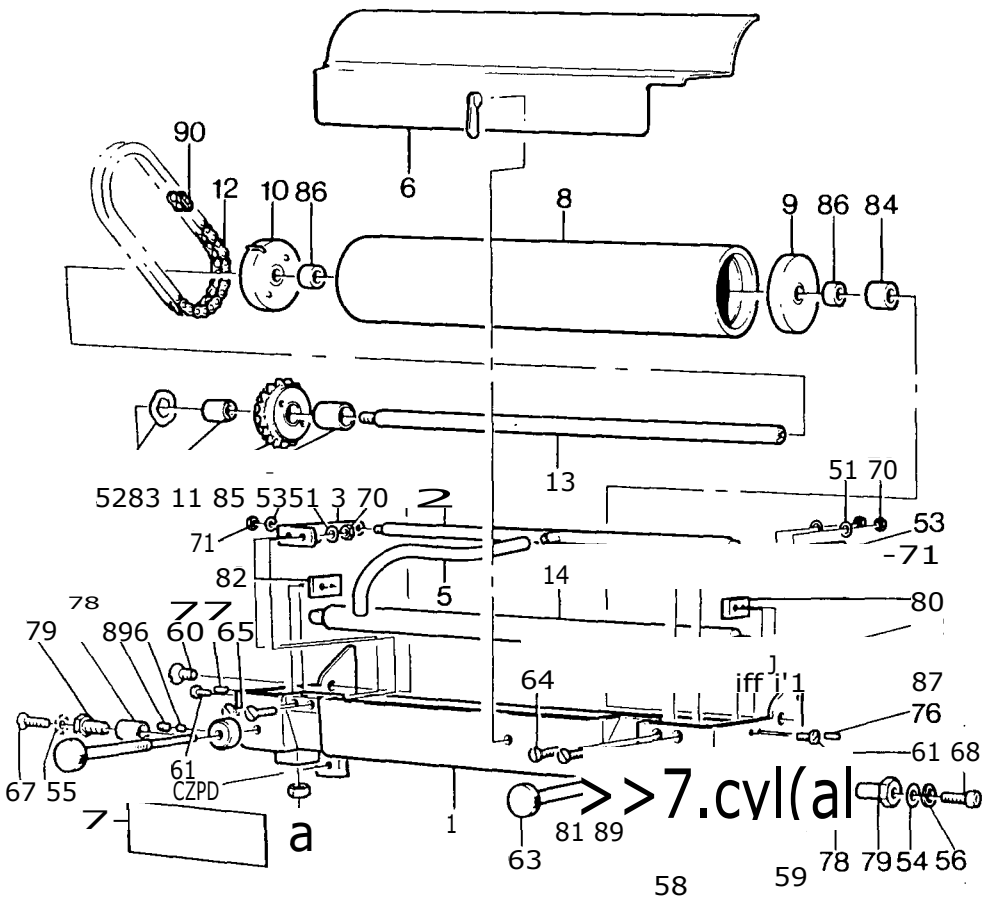

Index No.	Part No.		Equal to	Part	
50	L0CR039	)	CR39	Shim Washer	0.077 in
51	LIJCR108	(10)	CR108	Washer	
52	LOHR049	(10)	HR49	Wave Washer	
53	LOCR064	(10)	CR64	Washer	
54	LOCR009	(10)	CR9	Washer	
55	LOCR128	(25)	CR128	Lock Washer	
56	L0CR134	(25)	CR134	Spring Washer.	
58	LOOS018	(25)	0S18	Screw	10-24 UNC x 7/8 in
59	M14N003	(10)		Screw	1/4 in-20 UNC x 3/4 in
60	L0SC362	(10)	CS362	Screw	5/16 in-18 UNC x 1/2 in
61	L0CS379	(10)	CS379	Screw	8-32 UNC x 5/16 in
62	LOCS380	(10)	CS380	Screw	6-32 UNC x 5/16 in
63	LOCS400	(2)	CS400	Adjusting Screw	
64	M14N004	(20)	218530623P	Screw	8-32 UNC x $^{7}/_{16}$ in
65	M14N007	(10)	218530626P	Screw	8-32 UNC x 7/8 in
66	L00S164	(10)	0S164	Screw	10-32 UNC x $^{1}/_{8}$ in
67	LOCS361	(10)	CS361	Screw - R.H.	1/4 in-20 UNC x 3/4 in
68	L00S035	(10)	0S35	Screw - L.H.	1/4 in-20 UNC x 7/8 in
TO	LO1J018	(25)		Nut	8-32 UNC
71	LODT001	(25)	DT1	Nut	6-32 UNC
72	M14G005	(10)	218811031F	Nut	1/4 in-20 UNC
76	LOCW405	(25)	CW405	Spring Dowel	1/8 in dia. x 3/4 in
77	L0CW445	(25)	CW445	Spring Dowel	1/8 in dia. x 1/4 in
78	LOCW705	(5)	CW705	Bearing	
79	LOCW706	(5)	CW706	Pivot Stud	
80	LOCW710	(5)	CW710	Side Plate - L.H.	
81	LOCW711	(5)	CW711	Locking Collar	
82	LOCW712	(5)	CW712	Side Plate - R.H.	
83	LOCW714	(5)	CW714	Stud	
84*	LOCW716	(4)	CW716	Spacer	
85	LOHWO39	(5)	HW39	Bearing	
86	LOHW361	(5)	HW361,CW726	Bearing	
87	L0OW182	(10)	0W182	Bearing	
89	LOHWO57	(50)	HW57	Nylon Plug	
90	LOCW704	(5)	CW704	Link	

* 313 Part

Serial h

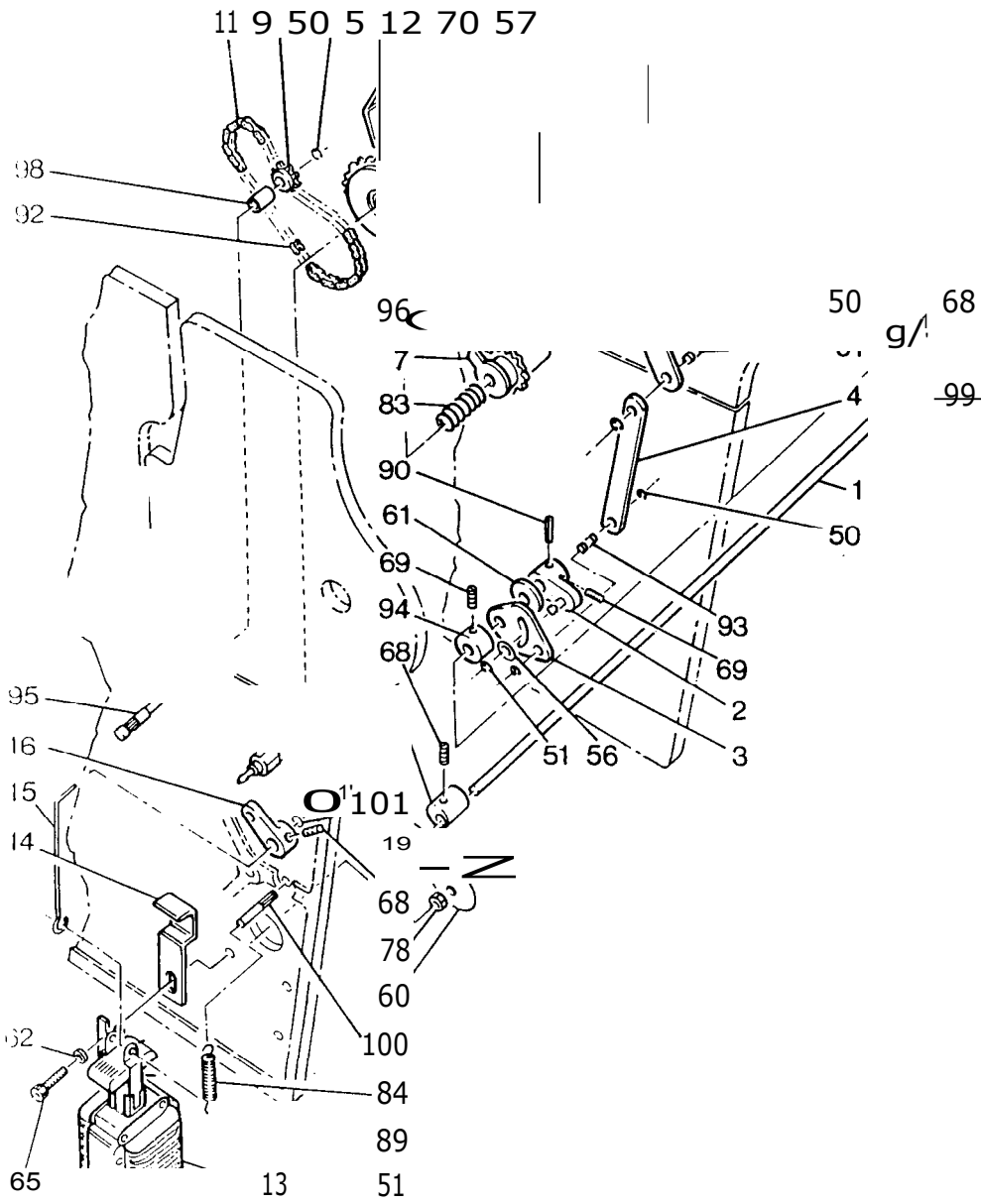

Index No.	Part No.	Equal to	Part	Serial No
1*	E10H015		Operating Shaft	
2	F14N022	656N	Operating Arm	
3	F14N023	660N	Operating Plate	
4	F14N024	664N	Connecting Link for 3 and 8	
5	F14N025	666N	Drive Sprocket	
6	F14N026	667N	Spindle for 5 -	
7	F14N027	669N	Clutch Cam Sprocket	
8	F14N028	671N	Operating Arm	
9	F14N029	679N	Idler Sprocket – complete with 98	
11	F14N030	683N	Chain (63 Links)	
12	F14N031	685N	Chain Guard	
13	E14R195		Solenoid 23/25V 50/60 Hz	
14	E10F100		Stop for 13	
15	E10F097		Link for 13	
16	E10F099		Arm for 1 and 15	
19	E14A065		Blanking Disc	

* 313 Part

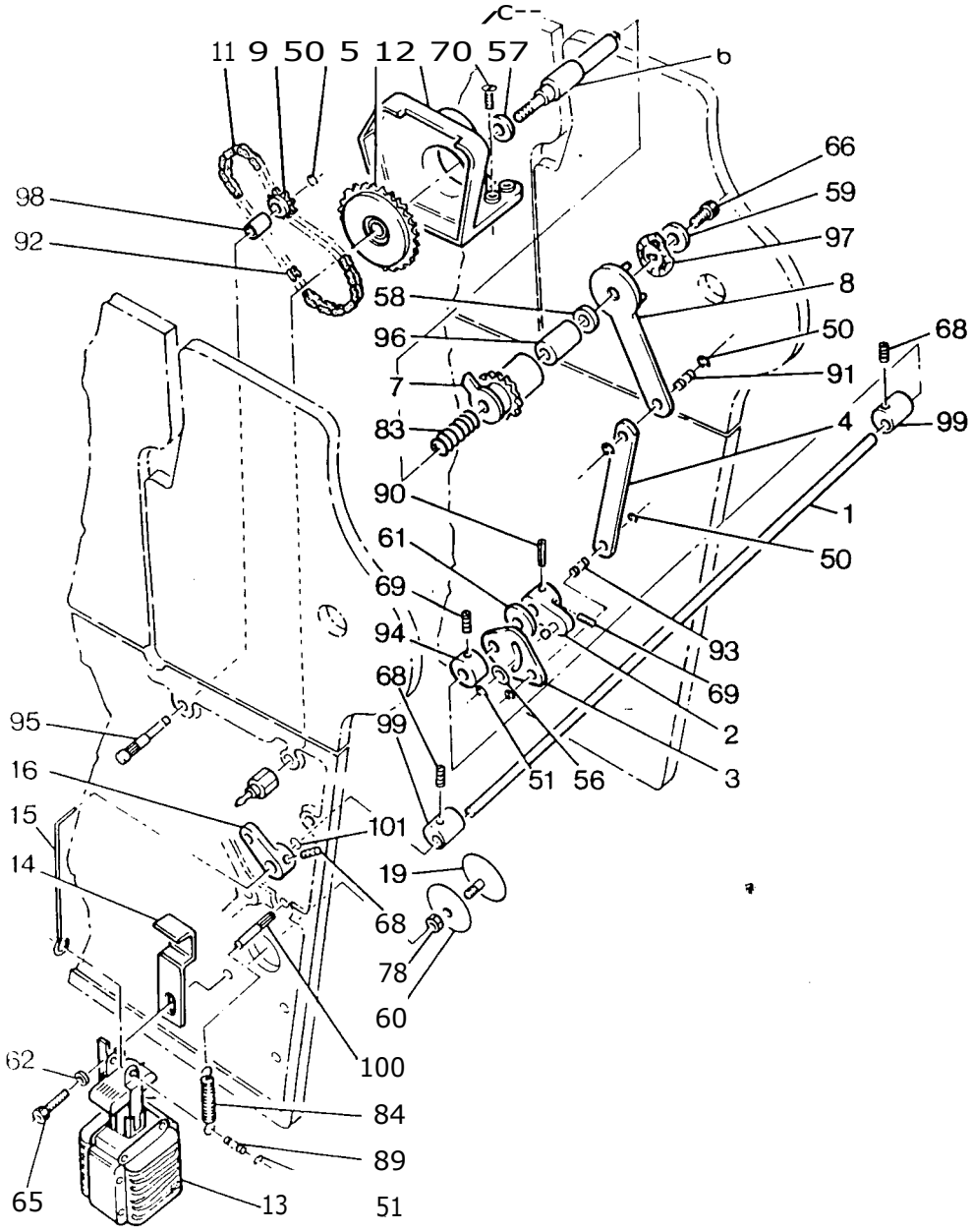

Index No.	Part No.		Equal to	Part		Serial No
50	LOCP002	('	CP2	Spring Clip		
51	LOCP009		CP9	Spring Clip		
56	LOCR121	(10)	CR121	Washer		
57	LOCR036	(25)	CR036	Packing Washer		
58	M14N009	(10)		Thrust Washer		
59	LOCR125	(10)	CR125	Washer		
60	L02A086	(10)		Washer		
61	LOCR147	(10)	CR147	Washer		
62	LOCR153	(10)	CR153,0R21	Washer		
65	LOOS009	(25)	059	Screw	10-32 UNF x 1/2 in	
66	LOOS008	(25)	058	Screw	10-32 UHF x 3/8 in	
68	M14N006	(10)		Screw	10-32 UHF x 5/16 in	
69	M14N002	(25)		Screw	10-32 UHF x 1/4 in	
70	1005363	(10)	CS363	Screw	10-24 UNC x 1/2 in	
78	LOCT072	(10)	CT72	Nut	4-40 UNC	
83	LOCU237	(5)	CU237 ----	Spring		
84	L04A141	(10)		Spring		
89	L035223	(5)		Peg		
90	LOCW444	(25)	CW444	Spring Dowel	3/32 in dia. x 7/8 in	
91	LOCW703	(10)	CW703	Link Pin		
92	LOCW704	(5)	CW704	Connecting Link		
93	LOCW708	(10)	CW708	Link Pin		
94	LOCW709	(5)	CW709	Collar		
95	LOCW715	(10)	CW715	Stud		
96	LOCW717	(5)	CW717	Bearing		
97	LOCW720	(5)	CW720	Clutch Cam Plate		
98	L0CW725	(10)	CW725	Bearing		
99	LOCW724	(4)	CW724	Eccentric		
100	L03W079	(2)		Spring Peg		
101	M14N010	(5)	236350536P	Bearing		

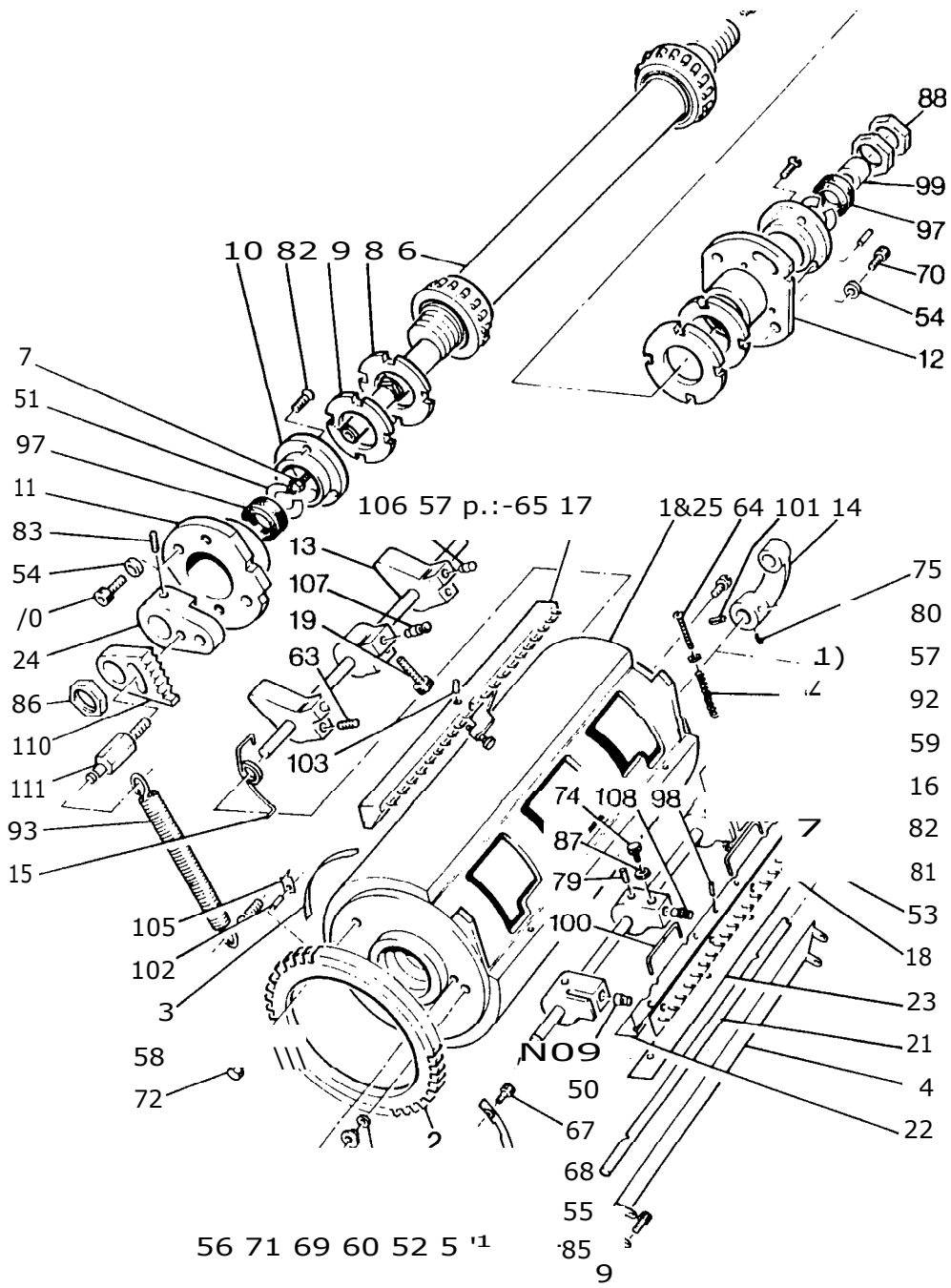

Index No.	Part No.	Equal to	Part	Serial No.
1*	E148069		Combination Plate Cylinuer - complete with 2,13,19,20-23, 25,50,52,53,57-64,65,69,72,74, 81,82,87,92 and 100-102	
2*	F14P302	3P-3	Gear	
3*	E05E379		Scale	
4	F14P004	27R	Guard	
5	F14R303	'4R3	Guard	
6*	E148042		Shaft - complete with Taper and Self-aligning Bearings	
7	F14M006	38P,43N,50M	Grease Nipple	
8	F14M030	3014	Ring Nut	
9	F1411005	31M	Lock Nut	
10	F14N214	18P-2	---- Plate	
11	F14P202	14P-2	Retainer - L.H.	
12	F14P203	15P-2	Retainer - R.H.	
13*	E148057		Plate Tension Shaft Assembly	
14	F14P010	221P	Arm	
15*	E04J056		Spring	
16*	E148059		Pivot Shaft Assembly	
17	E1413070		Hook Bar Assembly	
18*	-E148063		Hook Bar - Lower	
19*	E01E042		Tension Screw	
21*	E148061		Shaft	
22*	E148068		Clamp Body Assembly	
23*	E148067		Friction Pad	
24	F14P206	25P-2	Release Lever	
25*	E14B055		Plate Cylinder - only (not shown)	

* 313 Parts

FR

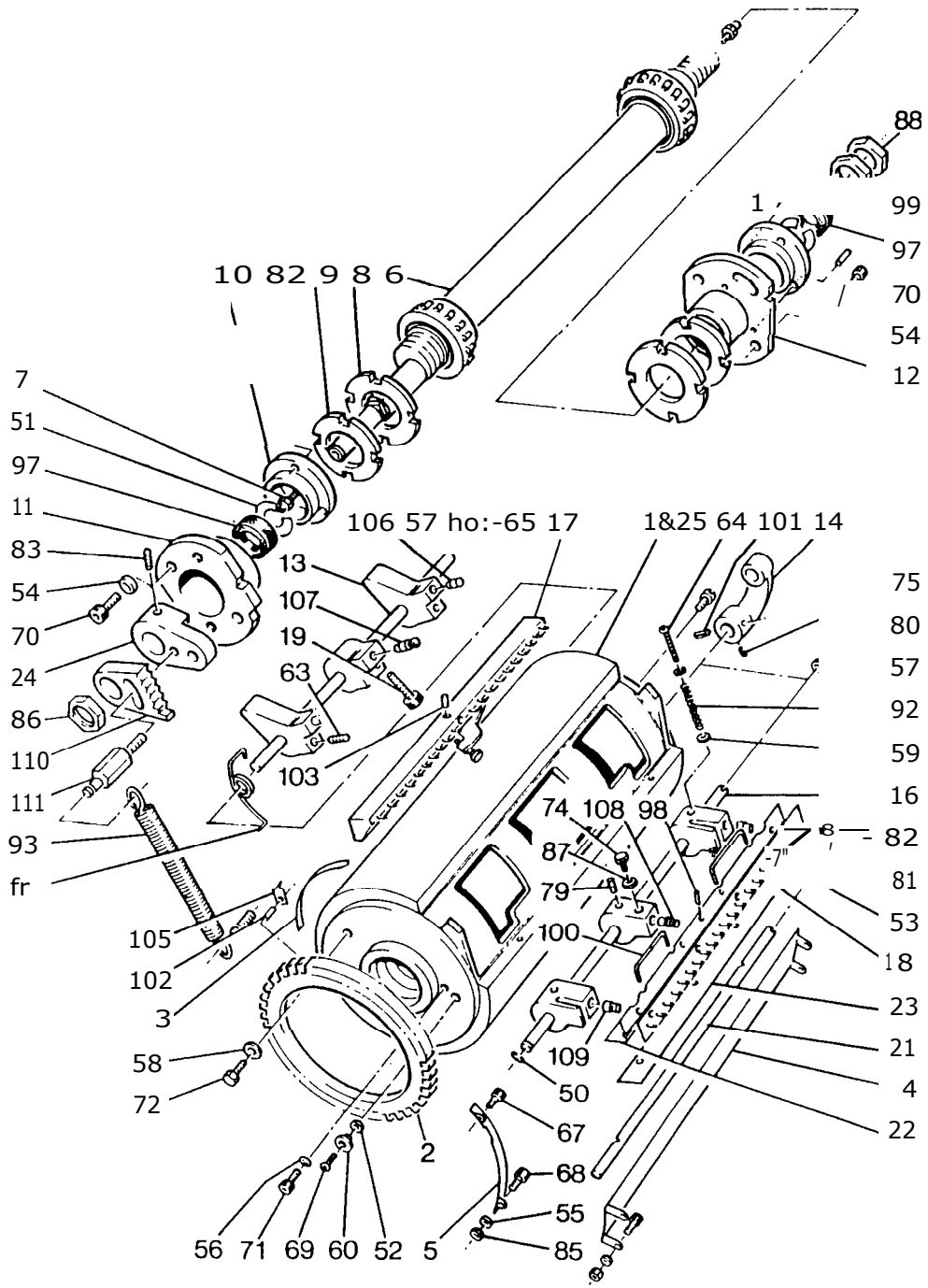

Index No.	Part No.		Equal to	Part		Serial No.
50	L00P020	(25)	0P20	Spring Clip		
51	L00P015	(25)	0P15	Spring Clip		
52	L02E008	(10)		Shim Washer (as required)	0.2mm	
53	P148027	(10)		Washer		
54	L00R003	(25)	0R3	Washer		
55	L0CR153	(10)	CR153,0R21	Washer		
56	L0CR079	(25)	CR79	Lock Washer		
57	L00R001	(25)	0R1	Washer		
58	L00R010	(10)	0R10	Washer		
59	L00R025	(10)	0R25	Washer		
60	L00R081	(10)	0R81	Washer		
63*	M14M003	(5)		Screw	1/4 in-28 UNF x 1/2 in	
64	M14M002	(5)		Screw	8-32 UNC x 2.1/4 in	
65	M14P012	(10)		Screw	10-32 UNF x 3/8 in	
67	L00S014	(25)	0S14	Screw	10-24 UNC x 3/8 in	
68	L00S017	(25)	0S17	Screw	10-24 UNC x 3/4 in	
69	L00S131	(10)	0S131	Screw	1/4 in-20 UNC x 3/8 in	
70	L00S034	(10)	0S34	Screw	1/4 in-20 UNC x 3/4 in	
71	L00S039	(10)	0S39	Screw		
72	M14G008	(10)		Locking Screw	5/16 in-18 UNC x 1/2 in	
73*	L00S244	(5)	05244	Screw centre		
74*	L0CS372	(10)	C5372	Screw	1/4 in-20 UNC x 5/8 in	
75	L005155	(10)	0S155	Screw	10-24 UNC x 3/16 in	
78*	L00S243	(5)	0S243	Screw - L.H. and R.H.		
79	M14P001	(10)		Screw	1/4 in-20 UNC x 3/8 in	
80	M14P002	(10)		Screw	10-32 UNF x 1/4 in	
81	L00S076	(10)	0576	Screw	10-24 UNC x 1/4 in	
82	M1411006	(10)	L00582	Screw	6-32 UNC x 3/8 in	
83*	M1411010	(10)		Screw	1/4 in-28 UNF x 5/16 in Tuflok	
85	L0HT052	(10)	HT52,0T1	Nut	10-24 UNC	
86	L00T020	(5)	0120	Nut	11/16 in-24 NS	
87	L00T008	(25)	078	Lock Nut	1/4 in-20 UNC	
88	L00T026	(3)	0726	Lock Nut	1.1/8 in-24 NS	
92	L0CU250	(5)	CU250	Spring		
93	L00U039	(10)	0U39	Spring		
97	P14D054	(4)		Felt Collar		
98*	L0HW008	(25)	HW8	Spirol Pin	3/32 in x 1/2 in	
99*	L00W130	(5)	0W130	Sleeve		
100*	P148071	(10)		Stop		
101	L00W006	(25)	0W6	Taper Pin	3/16 in x 7/8 in	
102	L00W028	(25)	0W28	Spring Dowel	1/16 in dia. x 2 in	
103	L00W031	(25)	0W31	Spring Dowel	1/16 in dia. x 5/8 in	
105	L00W131	(10)	0W131	Print Indicator		
106	L00W132	(10)	0W132	Pin - L.H. and R.H.		
107	L00W133	(5)	0W133	Stud - centre		
108	L00W214	(3)	0W214	Pivot Stud - centre		
109	M14P005	(5)		Stud - L.H. and R.H		
110	P148087	(3)		Adjustment Plate		
111	P148088	(3)		Screw		

* 313 Parts

FA

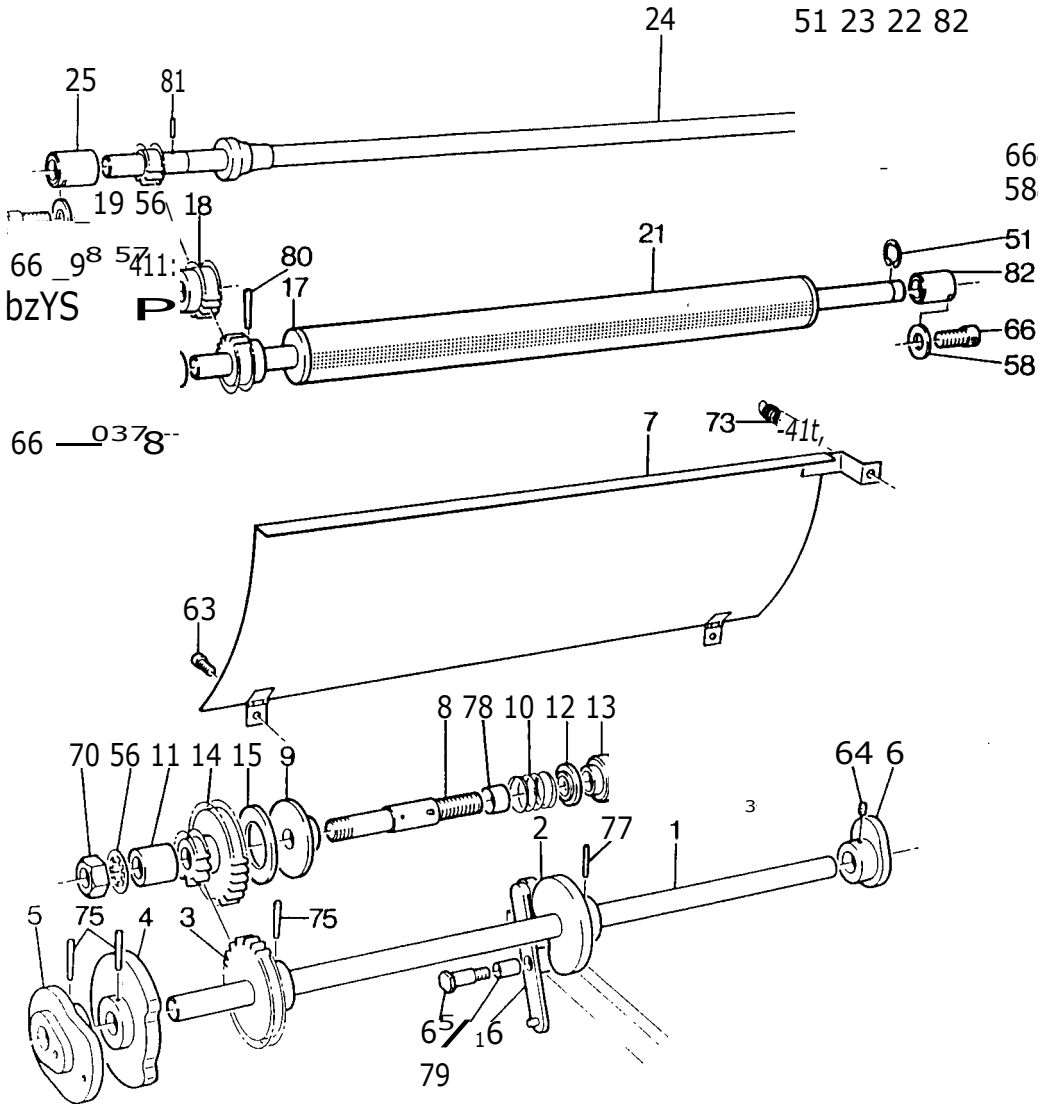

Index No.	Part		Equal to	Part	Serial NC
1*	F140301		10-3	Jogger Camshaft - complete	
2	E14A022		920	Jogger Cam (half drilled)	
3*	F1414302		80-3	Gear (half drilled)	
4*	F1441303		90-3	Feeler Cam (half drilled)	
5*	F140304		100-3	Drum Operating Cam (half drilled)	
6	F144005		50	Conveyor Jogger Cam	
7*	F14.4305		20-3	Deflector	
8	F144007		560	Screw Shaft	
9	F14008		570	Friction Plate	
10	F1441009		584	Spring	
11	F140010		144	Sleeve	
12	F144011		594	Cap	
13	F1441012		604	Adjusting Knob	
14*	F144306		7Q-3	Idler Gear	
15	F140014		620	Friction Disc	
16	F140015			Lever	
17*	F140307		134-3	Roller Assembly	
18*	F140308		140-3	Intermediate Gear	
19*	F140309		150-3	Stud	
21*	F144310		184-3	Cover	
22	F140020		490	Deflector Roller	
23	F144021		484	Ring	
24*	F144311		160-3	Auxiliary Roller Assembly	
25	E14U006		554	Bearing - L.H. end	
50	LOOP016	(25)	OP16	Spring Clip	
51*	LOCP013	(25)	CP13	Spring Clip	
56	LOCR079	(10)	CR79	Lock Washer	
57	LOOR011	(10)	OR11	Washer	
58	LOOR019	(10)	OR19	Washer	
63	LOOS014	(25)	OS14	Screw 10-24 UNC x 3/8 in	
64	LOOS159	(10)	OS159	Screw 1/4 in-28 UNF x 3/16 in	
65	LOOS206	(5)	OS206	Screw	
66	LOOS015	(25)	OS15	Screw 10-24 UNC x 1/2 in	
70	LOOT028	(10)	0728	Nut 3/8 in-24 UNF	
73	LOOU042	(10)	OU42	Spring	
75	M140003	(25)		Taper Pin 11/64 in x 1.1/8 in	
77	LOO4046	(25)	OW46	Spring Dowel 5/32 in dia. x 1 in	
78	LOCW051	(5)	CW51	Collar	
79	LOOW110	(5)	OW110	Bush	
80	10CW766	(10)	CW766	Taper Pin 5/32 in x 7/8 in	
81	M10002	(25)		Pin 3/16 in x 1 in	
82	LOCW767	(2)	CW767	Bearing	

* 313 Parts

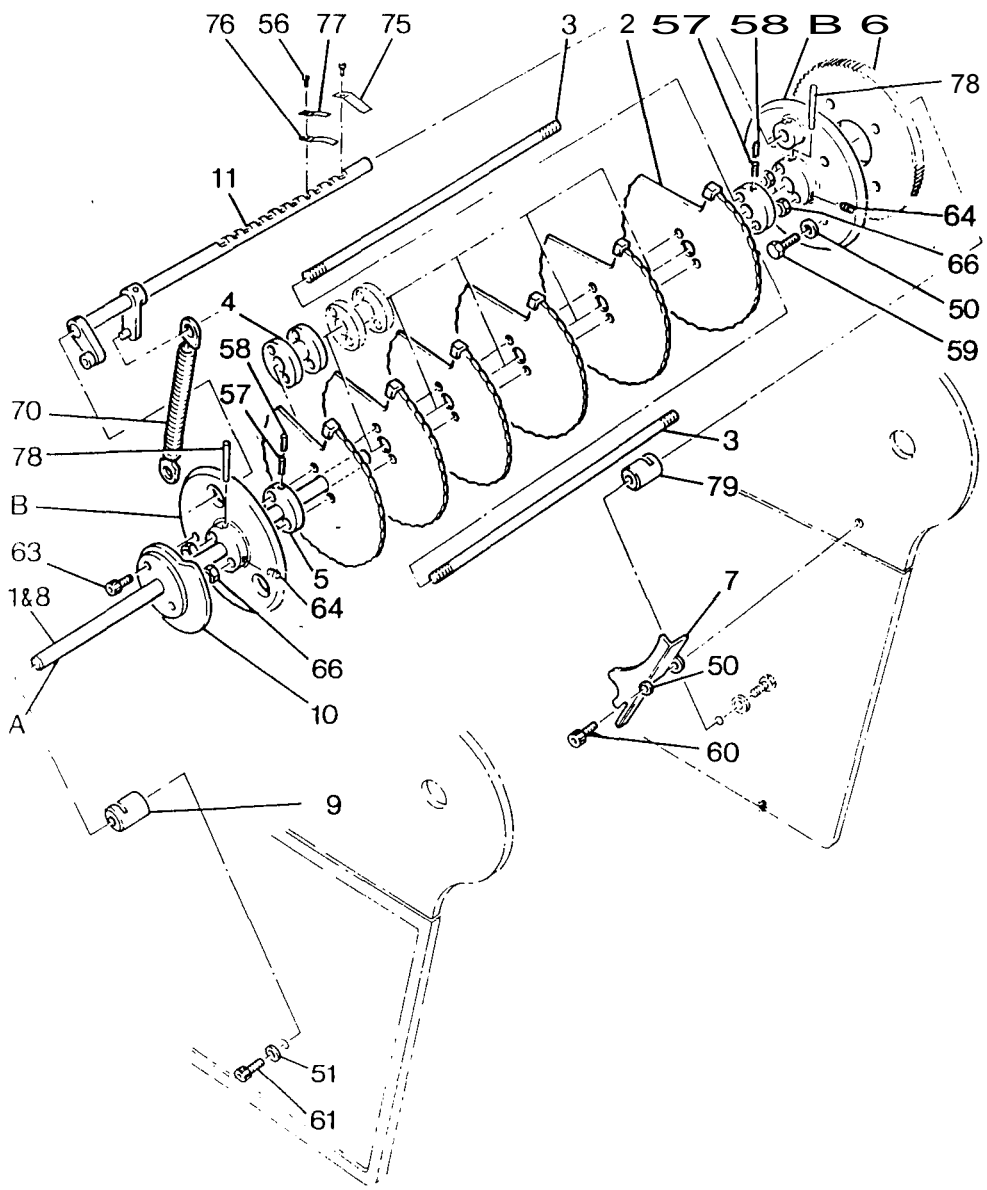

Index No.	Part No		Equal to	Part		Serial No.
1*	F14Q312		17Q-3	Cylinder - complete 1.6'h 2,3, 4,5,6,8,10 and 11		
2	F14Q024		39Q	Gripper Disc		
3*	F140313		5Q-3	Tie Rod		
4	F14Q026		384	Gripper Disc Hub		
5	F144027		35Q	Disc Collar		
6*	F114314		11Q-3	Gear		
7*	F144315		12Q-3	Guard		
8*	E14Q028			Shaft A, End Plates B and 78 Assembly		
9*	E14U010		4Q-3	Bearing - L.H.		
10	F14Q031		16Q	Cam		
11*	E14U020		19Q-3	Gripper Shaft		

* 313 Parts

50	LOOR003	(25)	0R3	Washer	
51	LOOR019	(10)	0R19	Washer	
56	LOOS003	(25)	0S3	Screw	8-32 UNC x 3/8 in
57	L005189	(10)	0S189	Lock Screw	1/4 in-20 UNC x 1/8 in
58	M14J012	(10)		Set Screw	1/4 in-20 UNC x 1/2 in Tuflok
59	L0CS372	(10)	CS372	Screw	1/4 in-20 UNC x 5/8 in
60	M14V004	(10)		Screw	10-24 UNC x 3/8 in
61	LOOS015	(25)	0S15	Screw	10-24 UNC x 1/2 in
63	L00S035	(10)	0S35	Screw	1/4 in -20 UNC x 7/8 in
64	LOOS161	(10)	0S161	Set Screw	1/4 in -28 UNC x 5/16 in
66	LOHT052	(10)	HT52	Nut	10-24 UNC
70	LOOU019	(5)	0U19	Spring	
75	L0OW137	(10)	0W137	Kicker	
76	L00W138	(10)	0W138	Gripper	
77	L0OW139	(10)	0W139	Support	
78	M14Q004	(25)		Taper Pin	3/16 in x 1.1/8 in
79	L0CW767	(2)	CW767	Bearing	

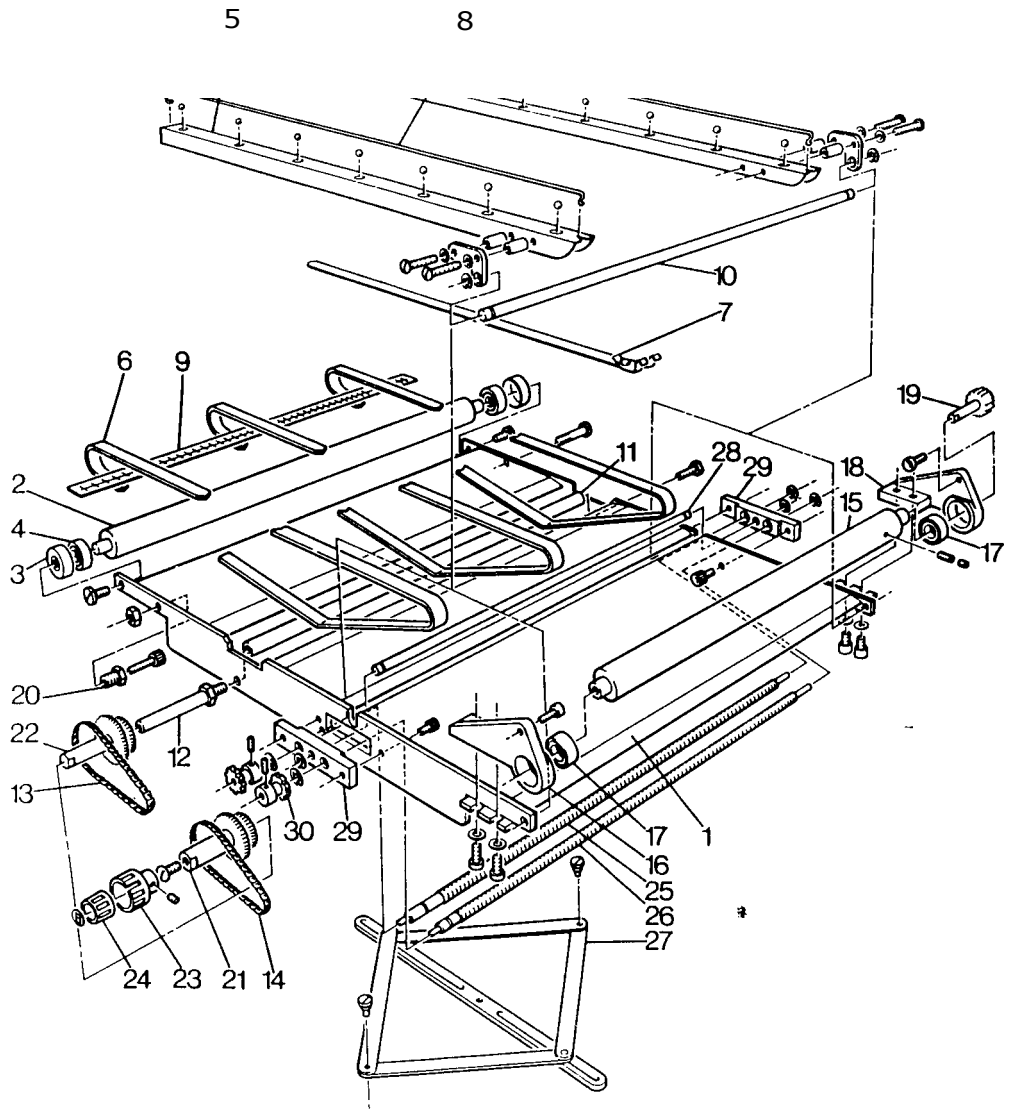

Index No.	Part No.	Equal to	Part	Serial No.
1*	E14V041		Platform	
2*	F14S301	2S-3	Front Roller	
3	F14S002	3S	Cover	
4	F14S003	4S	Bearing	
5*	F14S302	3S-3	Ball Carrier	
6*	F14S303	4S-3	Belt (set of 3)-	
7	E14V007	11S	Centre Guide	
8*	F14S304	5S-3	Retainer	
9*	E05E299		Scale	
10*	F14S306	7S-3	Shaft	
11*	F14S307	8S-3	Tie Rod	
12	F14S010	235	Adjusting Shaft	
13	F14S011	33S	Chain - 72 Links	
14	F145012	34$ ----	Chain - 61 Links	
15*	F14S308	10S-3	Back Roller	
16	F145014	37S	Bearing Bracket - L.H.	
17	F14S015	38S	Bearing	
18	F14S016	39S	Bearing Bracket R.H.	
19	F145017	45S	Drive Gear	
20	F145018	465,185V	Adjusting Nut	
21	F145019	49S	Gear/Sprocket Unit	
22	F14S020	50S	Gear/Sprocket Unit	
23	E14V019		Belt and Guide Adjusting Knob for L.H. side - complete with 64	
24	E14V028		Belt and Guide Adjusting Knob for R.H. side - complete with 64 and 79	
25*	F14S309	31-3	Adjusting Screw - L.H. side	
26*	F14S310	57-3	Adjusting Screw - R.H. side	
27*	F145311	61-3	Scissor Bracket	
28*	F145312	41-3	Shaft	
29	F145027	541	Bearing	
30	F14S028	521	Sprocket	

* 313 Parts

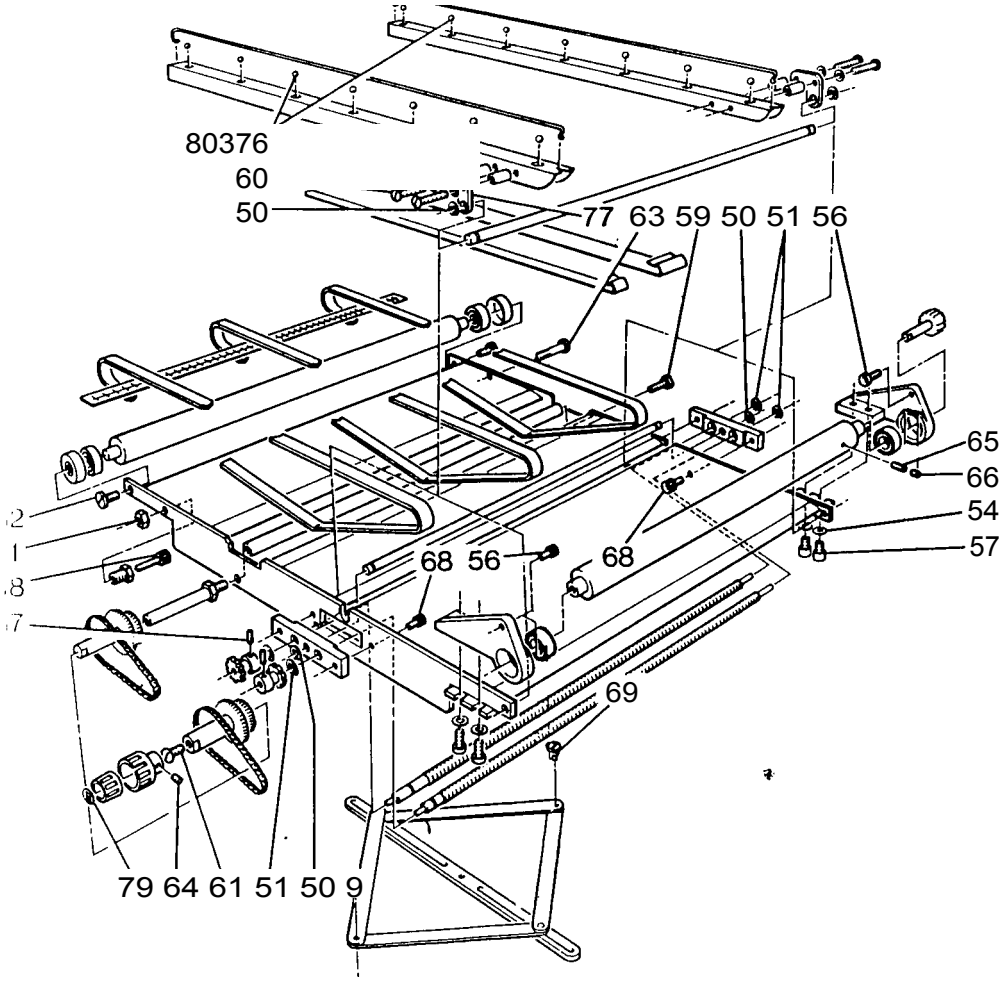

Index No.	Part No.		Equal. to	Part		Serial NC
50	L00P006		0P6	Spring Clip		
51	L00P017	(k))	0P17	Spring Clip		
53	L00R022	(10)	0R22	Washer		
54	L00R003	(25)	0R3	Washer		
56	M14N008	(25)		Screw Tuflok	1/4 in-20 UNC x 1/2 in	
57	L005033	(25)	0S33	Screw	1/4 in-20 UNC x 5/8 in	
58	L00S052	(10)	0552	Screw	1/4 in-28 UNF x 1.1/4 in	
59	L00S063	(10)	0S63	Screw	5/16 in-24 UNF x 5/8 in	
60	L00S100	(.5)	0S100	Screw	10-32 UNF x 1.1/4 in	
61	L00S101	(10)	05101	Screw	1/4 UNF x 1/2 in	
62	L00S125	(10)	05125	Screw		
63	L00S126	(5)	0S126	Screw (R.H. Front)		
64	L00S162	(25)	0S162	Screw	1/4 in-28 UNF x 3/8 in	
65	L00S170	(10)	0S170	Screw	1/4 in-20 UNC x 1/4 in	
66	L005189	(10)	0S189	Lock Screw	1/4 in-20 UNC x 1/8 in	
67	L005176	(10)	0S176	Screw	8-32 UNC x 1/8 in	
68	L00S002	(25)	0S2	Screw	8-32 UNC x 1/4 in	
69	L00S236	(10)	0S236	Screw		
71	L011T055	(10)	HT055	Nut	1/4 in-28 UNF	
76	L00W144	(25)	0W144	Steel Ball		
77	L00W145	(10)	0W145	Bracket		
78	L00W146	(20)	0W146	Distance Tube		
79	L05E280	(5)		Label		

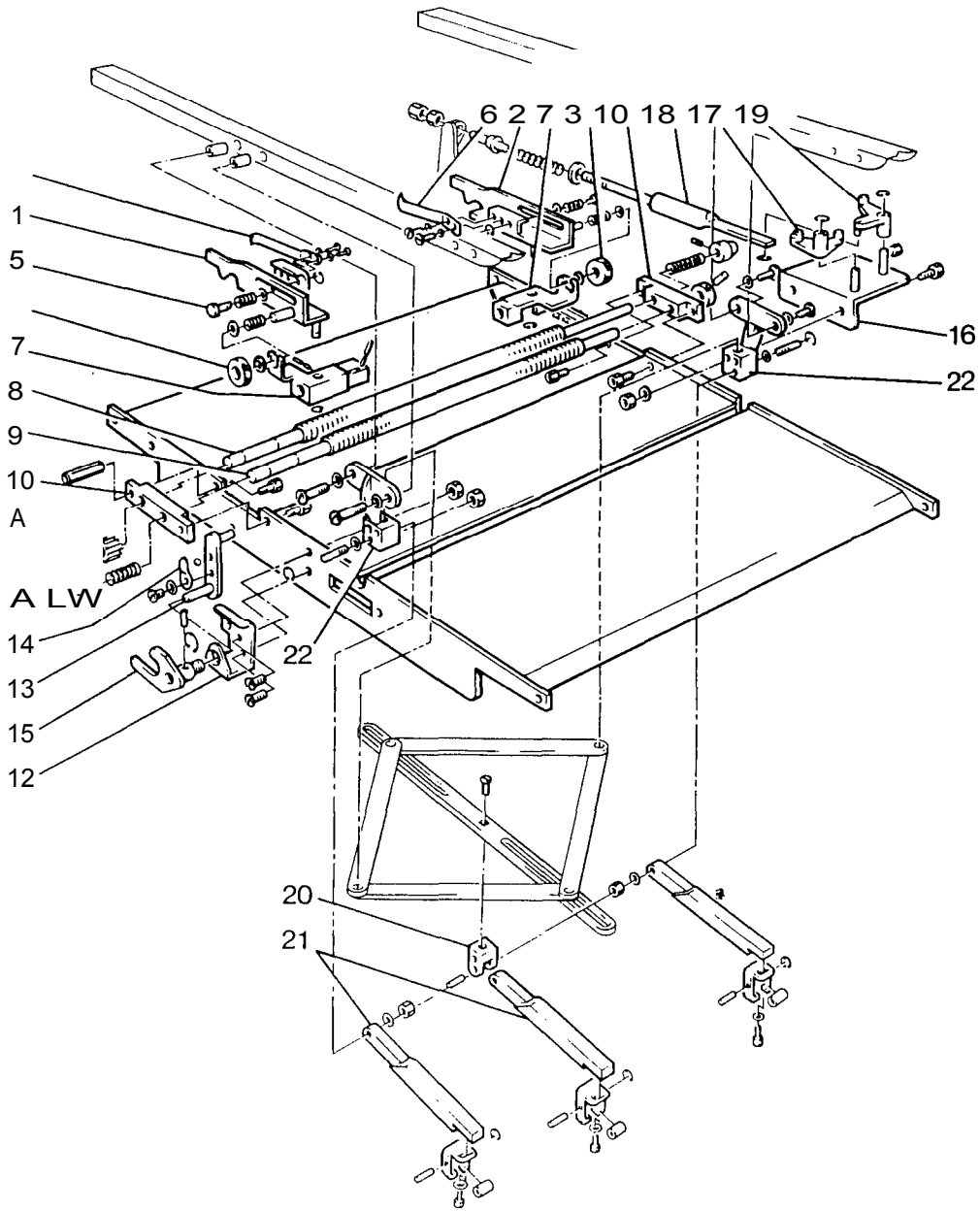

Index No.	Part No.	Equal to	Part	Serial
1	E14V022	11	Jogger Side Guide - L.H.	
2	E14V023	27	Jogger Side Guide - R.H.	
3	F147001	91	Adjusting Knob	
4	F141002	11/	Feather	
5	F147003	131	Stud	
6	F147004	161	Feather	
7	F147028		Bracket	
8*	F141301	11-3	Adjusting Screw R.H. - complete with 7, A & B	
9*	F147302	27-3	Adjusting Screw L.H. - complete with 7, A & B	
10	F147008	231	Plate	
12	F14T010	367	Bracket	
13	F147011	297	Lever	
14	F147012	331	Spring Plate	
15	F147013	357	Yoke	
16	F147014	487	Plate	
17	E14V005	461	Lever - R.H.	
18	F141015	401	Push Rod	
19	E14V004	47T	Lever - L.H.	
20	F147025	627	Adjusting Bracket	
21	F141026	667	Tension Weight	
22	F147027	731	Bracket - L.H. and R.H.	

* 313 Parts

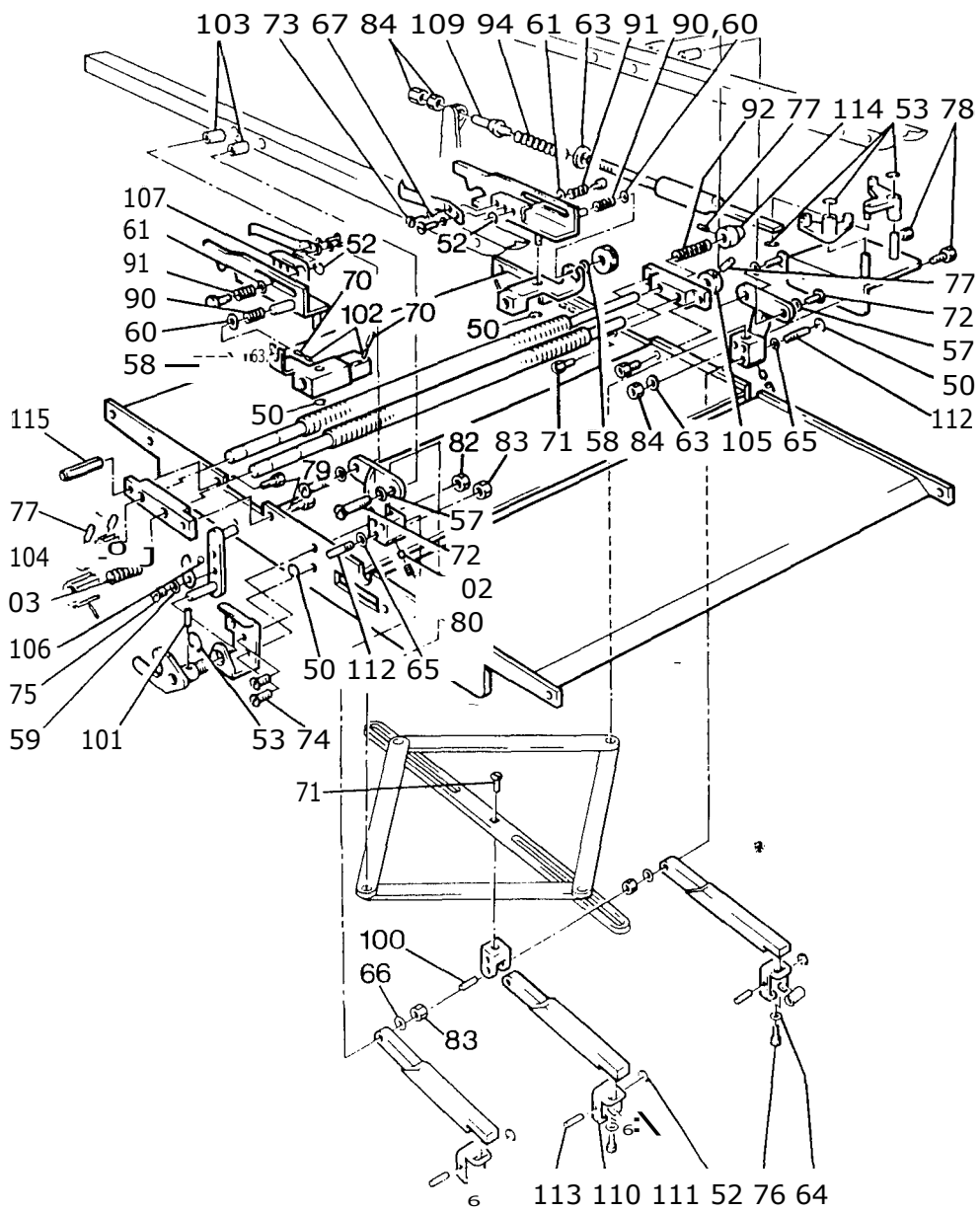

Index No.	Part No.		Equal to	Part		Serial N
50	LOOP001		OP1	Spring Clip		
51	LOLP003	(25)	LP3	Spring Clip		
52	LOOP010	(25)	OP10	Spring Clip		
53	LOOP005	(25)	OP5,LP5	Spring Clip		
57	LOOR022	(10)	OR22	Washer		
58	LOOR014	(25)	OR14	Washer		
59	LOOR025	(10)	OR25	Washer		
60	LOOR026	(10)	OR26	Washer		
61	LOOR031	(10)	OR31	Washer		
	LOOR075	(10)	OR75	Shim Washer for 8 and 9 (if required - not shown)		
63	LOOR003	(25)	OR3	Washer		
64	LOCR153	(10)	CR156,OR21	Washer		
65	LOCR145	(25)	CR145	Lock Washer		
66	LOOR001	(25)	~~OR1~~	Washer		
67	M14V003	(10)		Shim Washer		
70	LOCS386	(10)	CS386	Screw	10-32 UNF x 1/8 in	
71	LOOS002	(25)	O52	Screw - R.H.	8-32 UNC x 1/4 in	
72	LOOS100	(5)	OS100	Screw	10-32 UNF x 1.1/4 in	
73	LOOS102	(10)	OS102	Screw	8-32 UNC x 3/32 in	
74	LOOS103	(10)	O5103	Screw	8-32 UNC x 3/8 in	
75	LOOS104	(10)	OS104	Screw	8-32 UNC x 3/16 in	
76	LOOS105	(10)	O5105	Screw	10-24 UNC x 3/8 in	
77	LOOS176	(10)	OS176	Screw	8-32 UNC x 1/8 in	
78	LOOS064	(10)	OS64	Screw	1/4 in-28 UNF x 5/8 in	
79	LOOS004	(25)	O54	Screw - L. H.	8-32 UNC x 1/2 in	
80	LOOS169	(10)	O5169	Screw	10-32 UNF x 1/2 in	
82	M141008	(10)		Nut	8-32 UNC	
83	LOOT032	(10)	O732	Nut	6-40 UNF	
84	M14G006	(10)		Nut	1/4 in - 28 UNF	
90	LOOU048	(10)	OU48	Spring		
91	LOOU049	(10)	OU49	Spring		
92	LOOU050	(3)	OU50	Spring		
93	LOOU051	(5)	OU51	Spring		
94	LOOU052	(3)	OU52	Spring		
100	LOO4045	(25)	OW45	Spring Dowel	5/32 in x 7/8 in	
101	LOOW033	(25)	OW33	Spring Dowel	3/32 in dia. x 3/4 in	
102	LOOW085	(10)	OW85	Plug		
103	LOOW146	(20)	OW146	Spacer		
104	LO(1W148	(·5)	OW148	Stop - L.H.		
105	LOO4149	(5)	OW149	Collar		
106	LOOW150	(20)	OW150	Steel Ball		
107	P14V017	(3)		Bracket		
108	P14V018	(3)		Bracket		
109	LOOW153	(5)	OW153	Sleeve		
110	LOOW154	(3)	OW154	Bracket		
111	LOOW155	(3)	OW155	Roller		
112	LOOW156	(5)	OW156	Spindle		
113	LOOW217	(5)	OW217	Spindle		
114	LOOW147	(5)	OW147	Cap - R.H.		
115	LO1J016	(5)		Nut	8-32 UNC x 5/8 in	

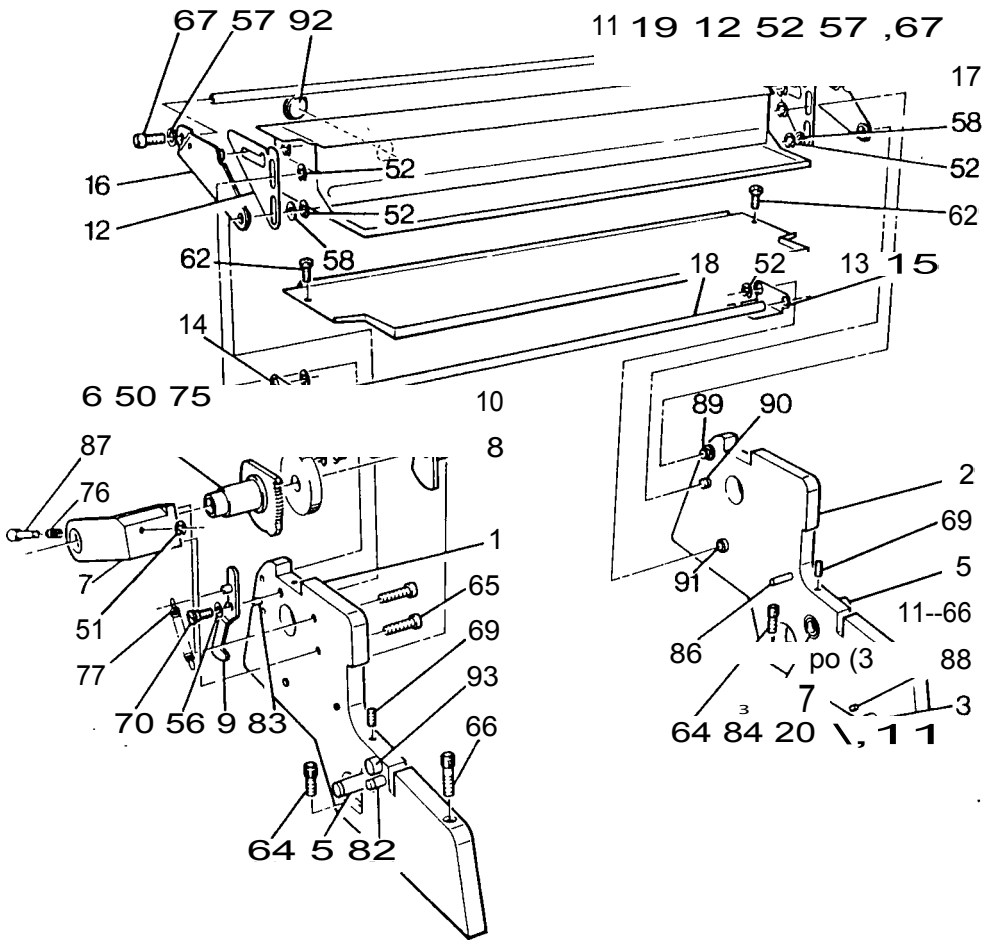

Index No.	Part No		Equal to	Part	Serial No.
1	E14X06u			Side Frame - L.H. - complete witn 4, 5,69,82,83,84,86,88,89,90 and 91	
2*	E14B075			Side Frame - R.H. - complete with 3, 4,5,20,69,82,84,86,88,89,90 and 91	
3*	E148074			Stop Pin	
5	F14U003		20U	Idler Bush Assembly	
6	F144J004		164U	Water Quantity Plate	
7	F14U005,		39U	Bracket	
8	E14X028		170U	Ductor Cam	
9	F141J006		43U	Ductor Yoke Latch	
10	F14U007		163U	Drive Shaft Pawl	
11*	••E14X067			Reservoir	
12	E14X036			Support Plate	
13*	E14X064			Drip Tray	
14	E14X043			Bracket - L.H.	
15	E14X042			Bracket - R.H.	
16	E14X068			Lifting Arm - L.H.	
17	E14X069			Lifting Arm - R.H.	
18*	E14X065			Tie Bar	
19*	E14X072			Lifting Bar	
20	F14U032		217U	Stop Pin	

* 313 Parts

50	LOOP006	(25)	OP6	Spring Clip	
51	M14R004	(25)		Spring Clip	
52	LOLP004	(25)	LP4	Spring Clip	
56	M14U006	(10)		Shim Washer	
57	LOCR003	(25)	CR3	Lock Washer	
58	M14U003	(10)		Washer	
62	LOLS013	(25)	LS13	Screw	M4 x 8mm
64	L005033	(25)	0S33	Screw	1/4 in-20 UNC x 5/8 in
65	L00S034	(10)	0S34	Screw	1/4 in-20 UNC x 3/4 in
66	L005038	(10)	0S38	Screw	1/4 in-20 UNC 1.1/2 in
67	LOOS105	(10)	0S105	Screw	10-24 UNC x 3/8 in
69	L005169	(10)	0S169	Screw	10-32 UNF x 1/2 in
70	L00S237	(10)	0S237	Screw	
75	L0OU053	(10)	0U53	Spring	
76	L001J054	(10)	01.154	Spring	
77	L0OU055	(5)	0U55	Spring	
82	L03W115	(5)		Spring Peg (2 required per Side Frame)	
83	LOHWO10	(10)	HW10	Spirol Pin	5/32 in dia. x 1 in
84	M14U011	(10)		Bush	
86	LOHWOO9	(10)	HW9	Spirol Pin	5/32 in dia. x 1.1/4 in
87	L00W162	(5)	0W162	Plunger	
88	L0OW163	(10)	0W163	Spring Peg	
89	L035220	(2)		Stud	
90	L035221	(2)		Stud	
91	L03N172	(2)		Pin	
92	M144J004	(10)		View Plug	
93	L00W204	(5)	0W204	Stop Pin	

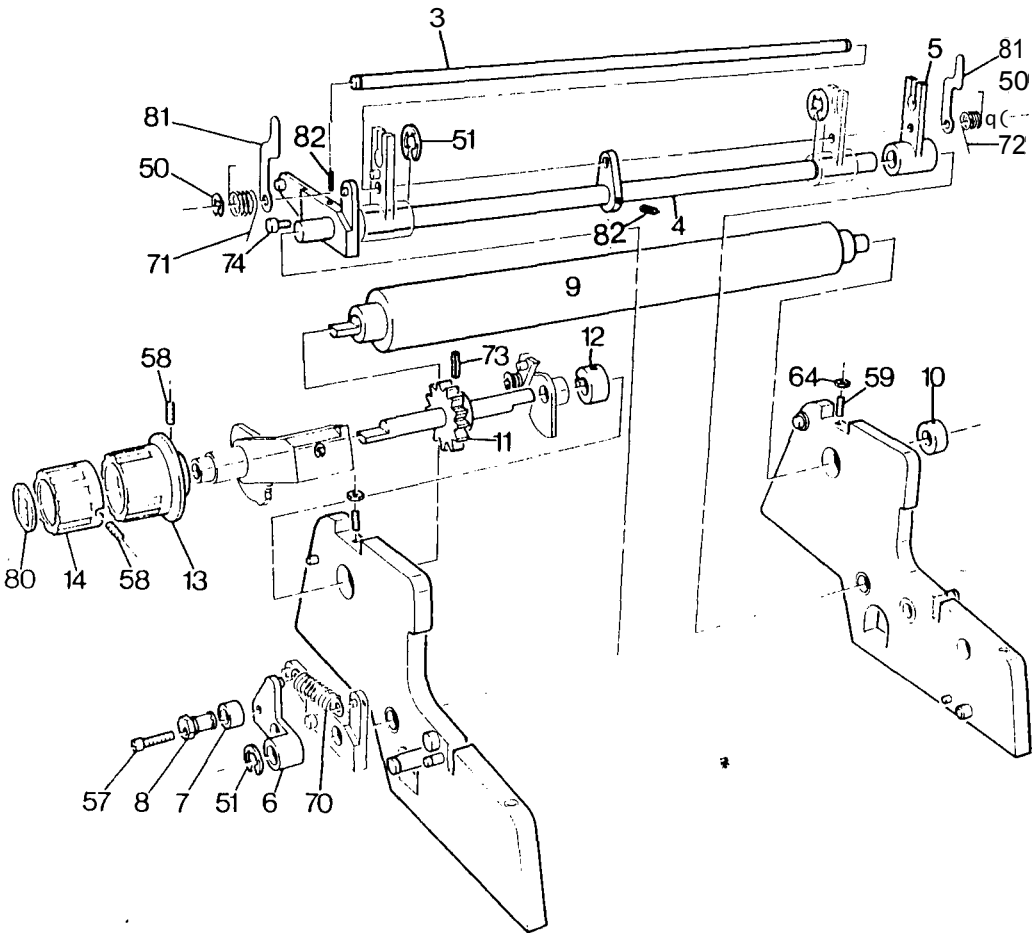

Index No.	PP¯t r		Equal to	Part	Serial N,
3*	F14U301		3U-3	Spindle	
4*	E14X081		4U-3	Shaft Assembly	
5	F14U012		58U	Arm - L.H. and R.H. ends	
6	F14U013		165U	Plate	
7	F141i014		167U	Roller	
8	F14U015		166U	Eccentric Nut	
9*	E14X013		5U-3	Fountain Roller	
10	F14U016		158U	Bush - R.H.	
11	E14X019			Fountain Drive Shaft - complete	
12	F14U017		157U	Friction Bush - L.H.	
13	E14X024			Quantity Control Knob with 58	
14	E14X050			Knob - complete with 58 and 80	
50	LOLP004	(25)	LP4	Spring Clip	
51	LOCP013	(25)	CP13	Spring Clip	
57	M14A009	(25)	0S10	Screw 10-32 UNF x 5/8 in	
58	L005162	(25)	0S162	Screw 1/4 in-28 UNF x 3/8 in	
59	L00S163	(5)	0S163	Screw 1/4 in-28 UNF x 1 in	
60*	L005167	(25)	0S167	Screw 10-32 UNF x 5/16 in	
64	L001033	(10)	0733	Lock Nut 1/4 in-28 UNF	
70	L00U058	(10)	0U58	Spring	
71	LOOU056	(5)	01156	Spring L.H.	
72	L00U057	(5)	01157	Spring - R.H.	
73	LOCW024	(25)	CW24	Spring Dowel 1/8 in dia. x 5/8 in	
74	L0OW212	(10)	0W212	Spring Peg	
80	L05E283	(10)		Label	
81	L001013	(4)	0W13	Latch	
82*	L00W018	(25)	0W18	Spring Dowel	

* 313 Parts

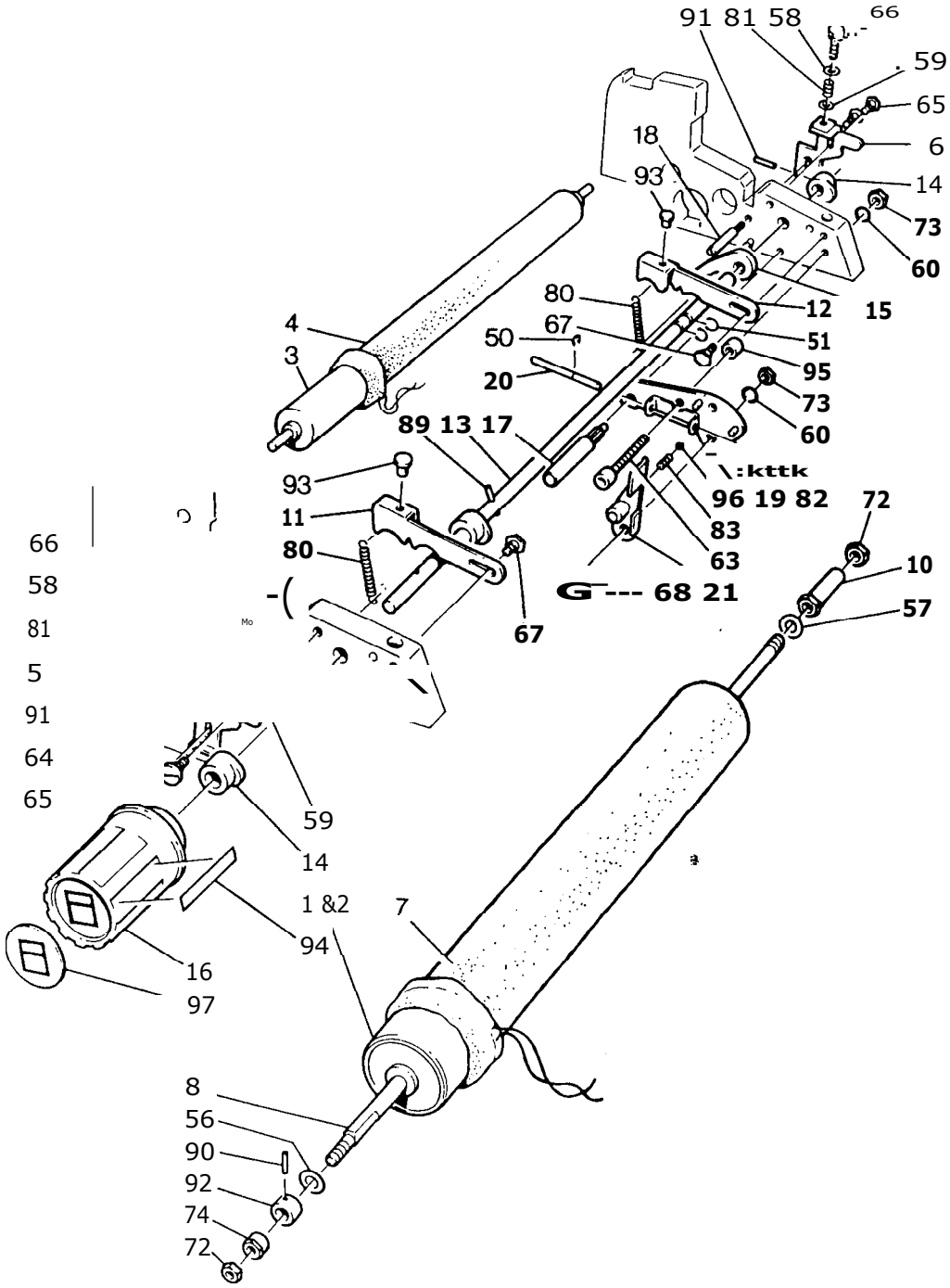

Index No.	P; t		Equal to	Part	Serial Na
1*	F141J303		6U-3	Molleton Roller - complete	
2*	F14U304		71J-3	Molleton Roller	
3*	F14U305		8U-3	Ductor Roller	
4*	F14U306		10U-3	Cover (supplied in pack of 2)	
5	F14U021		94U	Link - L.H.	
6	F14U022		971J	Link - A.H.	
7*	F14U307		11U-3	Cover (supplied in pack of 2)	
8*	F14011		9U-3	Shaft	
10	F14U025		156U	Adjustable Sleeve	
11	F14U026		193U	Molleton Release Arm - L.H.	
12	F14U027		194U	Molleton Release Arm - R.H.	
13*	E1413072			Camshaft - complete	
14	E14X058			Cam	
15*	F14U030		/mnu	Release Cam	
16	E14X049			Knob - complete with 64,94 and 97	
17	E148074			Stop Pin - Back	
18	F14U032		217U	Stop Pin - Front	
19	E148037		208U	Plate	
20	F14U033		210U	Plunger	
21	F14U034		212U	Lever	
50	L00P001	(25)	0P1	Spring Clip	
51	L00P022	(25)	0P22	Spring Clip	
56	L02A092	(10)		Washer - L.H. side	
57	L00R029	(10)	0R29	Washer - R.H. side	
58	L0CR099	(10)	CR99	Washer (polythene) - top	
59	L00R031	(10)	0R31	Washer (fibre) - bottom	
60*	L0CR003	(25)	CR3	Lock Washer	
63*	L0CS465	(5)	C5465	Screw	10-32 UNF x 1.1/2 in
64	L00S162	(25)	0S162	Screw	1/4 in-28 UNF x 3/8 in
65	L00S205	(10)	0S205	Screw	
66	L005239	(3)	0S239	Adjusting Screw	
67	L005262	(10)	0S262	Screw	
68	L00S271	(5)	0S271	Pivot Screw	
72	M14U007	(5)		Nut	1/4 in-28 UNF
73*	8148009	(10)		Nut	10-32 UNF
74	M14U010	(5)	151U	Adjusting Nut	
75	L00T023	(10)	0123	Nut	
80	L00U059	(5)	0U59	Spring	
81	L00U060	(5)	0(160	Spring	
82	L00(U061	(5)	0U61	Spring	
83	L00U062	(10)	0U62	Spring	
89	L00W015	(10)	0W15	Spirol Pin	1/8 in dia. x 3/4 in
91	L0CW562	(10)	CW562	Spring Dowel	1/8 in dia. x 3/4 in
93	L00W165	(5)	0W165	Peg	
94	L00(fl66	(10)	0W166	Indicator Label	
95*	L02J148	(5)		Spacer	
96	L004203	(5)	0W203	Steel Ball	3/16 in dia.
97	L05E282	(10)		Water Label	

* 313 Parts

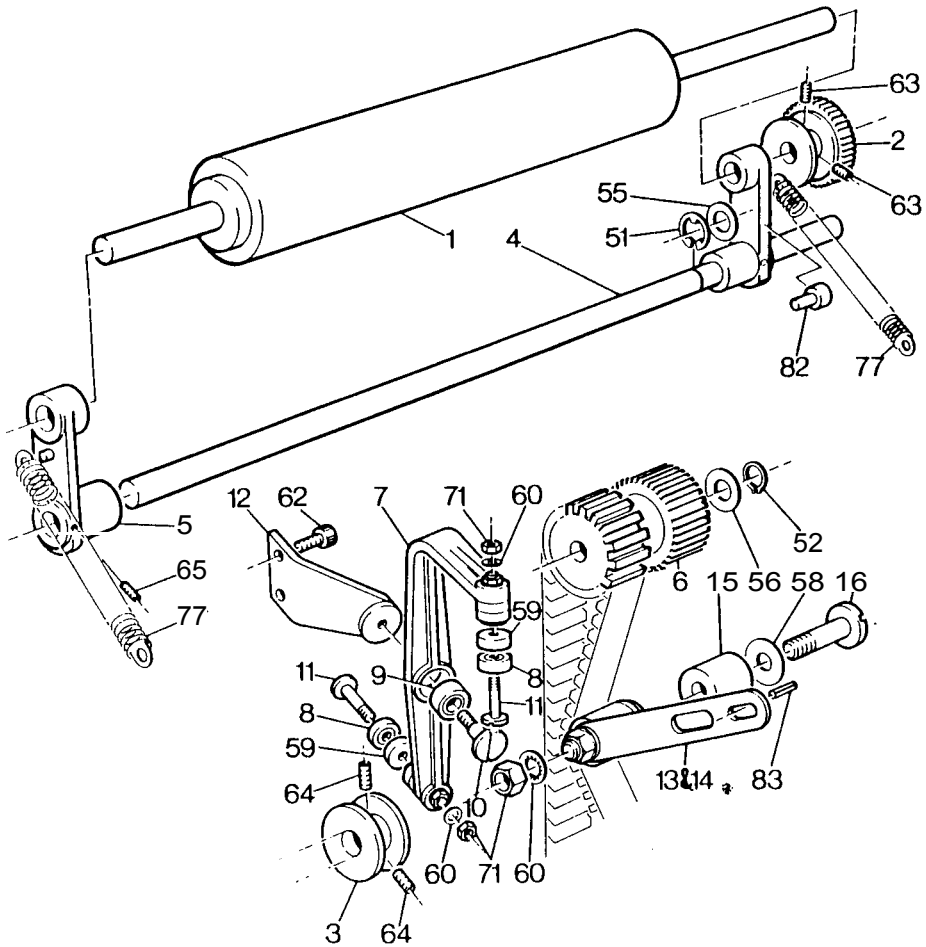

Index No.	Part No.		Equal to	Part	
1*	F14 .0		1311-3	Oscillating Roller	
2*	F1411203		2611-2	Gear and Spool	
3	F1411037		135U,212V	Guide Wheel	
4*	E14X074		1411-3	Support Shaft - Sub Assembly	
5	E14X061			Arm	
6	F14U205		32U-2	Oscillating Gear/Pulley	
7*	F14U209		42U-2	Oscillating Link - complete	
8	F14U040		1291.1	Ball Race	
9*	F1411210		46U-2	Bearing	
10*	F1411211		47U-2	Screw	
11*	F141J213		54U-2	Stud	
12*	F14U212		48U-2	Bracket	
13*	F1411215		35U-2	Tension Arm - complete	
14*	F1411206		3611-2	Arm	
15*	F14U207		37U-2	Bearing	
16*	F1411208		3811-2	Screw	

* 313 Parts

51	LOOP002	(25)	0P2	Spring Clip	
52	LOOP018	(10)	0P18	Spring Clip	
54	LOOR003	(25)	0R3	Washer for 13 (not shown)	
55	LOOR041	(10)	0R41	Washer	
56	LOOR082	(10)	0R82	Washer	
58	L00R039	(10)	0R39	Spacer	
59	LOOR056	(10)	0R56	Spacer	
60	L00R069	(25)	0R69	Lock Washer	
62	LOOS051	(10)	0551	Screw	1/4 in-28 UNF x 7/8 in
63	L00S176	(10)	05176	Screw	8-32 UNC x 3/16 in
64	L00S164	(10)	05164	Screw	10-32 UNF x 1/8 in
65	L00S157	(10)	05157	Screw	10-24 UNC x 3/8 in
71	L00T023	(10)	0723	Nut	10-32 UNF
77	LOCU043	(10)	CU43	Spring	
82	L0OW204	(5)	0W204	Stop	
83	L0OW039	(25)	01439	Spring Dowel	1/8 in dim. x 7/16 in

Serial N

."

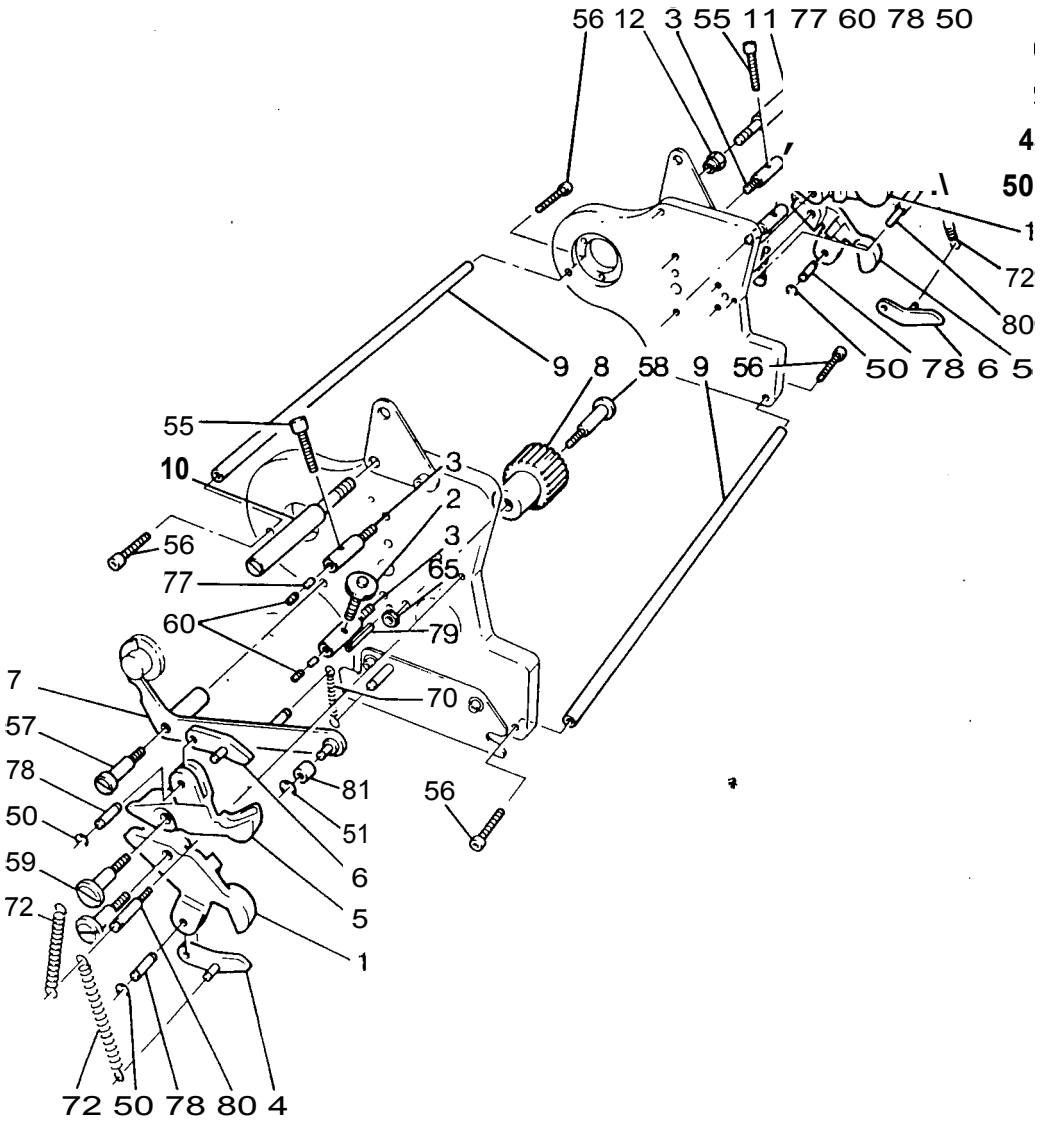

Index No.	Part "o.		Equal to	Part	Serial
1	F1 001		43V	Support	
2	F14V002		13V	Adjusting Screw for 1	
3	F14V003		7V	Stud for 2 and 56	
4	E14H153		44V	Retaining Arm for 1	
5	F14V004		38V	Support	
6	E14H152		39V	Retaining Arm for 5	
7	F14V005		26V,501V-S	Shut-Off Lever	
8*	F14v301		1v-3	Intermediate Gear	
9*	F14v302		2v-3	Tie Rod	
10	F14V008		34V	Lifting Screw - long	
11	F14V009		216V	Lifting Screw - short	
12	–			Adjusting Nut - see H6-10	
50	LOOP001	(25)	OP1	Spring Clip for 78	
51	LOLP003	(25)	1:P3	Spring Clip for 7	
55	LOOS013	(10)	0S13	Screw for 1 10-32 UHF x 1 in and 5	
56	L00S036	(10)	0536	Screw for 9 1/4 in-20 UNC x 1 in	
57	L00S212	(5)	0S212	Pivot Screw for 7	
58*	M14V005	(3)	31V-3	Screw for 8	
59	L00S214	(3)	0S214	Pivot Screw for 1 and 5	
60	LOHS157	(10)	HS157	Screw for 3 10-32 UNC x 3/16 in	
65	LOHT050	(10)	HT50,0T9	Nut for 58 1/4 in-20 UNC	
70	L00U065	(10)	0U65	Spring for 7	
72	L04A139	(5)		Spring for 4 and 6	
77	L00M169	(10)	0W169	Plug for 3 and 60	
78	L0OW176	(10)	0W176	Pin for 4 and 6	
79	L0OW047	(25)	0W47	Spring Dowel 5/32 in dia. x 1.3/4 in for 7	
80	L03W067	(5)		Spring Peg for 72	
81	LOHW188	(10)	HM188	Roller for 7	

* 313 Parts

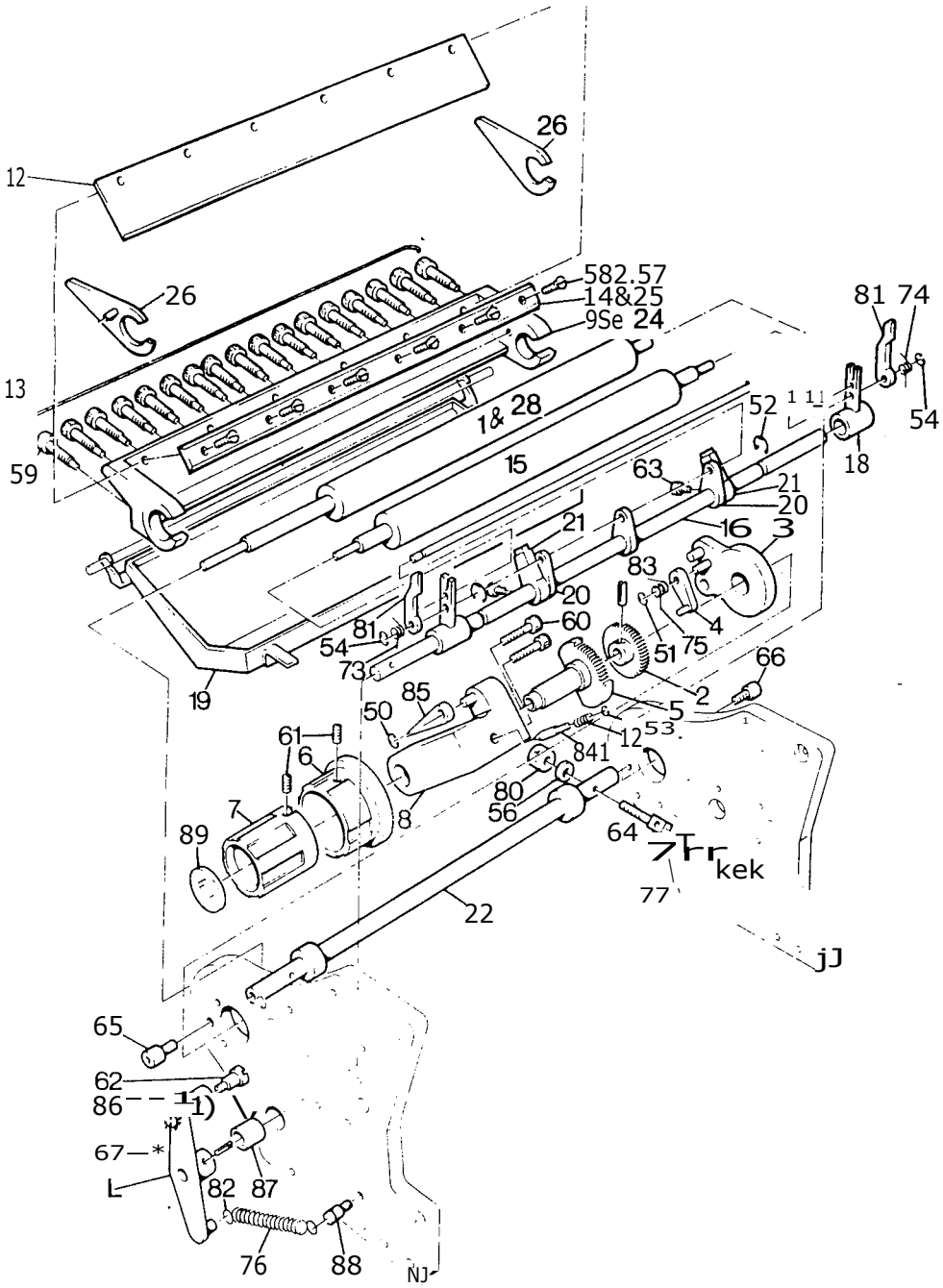

Index No.	Pe. h		Equal to	Part	Serial No
1*	F14V303		10V-3	Fountain Roller - complete	
2	F14V020		240V	Ratchet Wheel	
3	F14V021		64V	Operating Plate	
4	F14V022		66V	Pawl	
5	F14V023		238V	Quantity Plate	
6	E14H054			Quantity Control Knob with 61	
7	E14H141			Knob - complete with 61 and 89	
8	F14V024		55V	Support	
9*	F14V304		34V-3	Trough	
12*	F14V305		6V-3	Ductor Blade	
13*	F14V306		4V-3	Lock Spring	
14*	F14V307		5V-3	Clamp	
15*	F14V308		7V-3	Ductor Roller	
16*	F14V309		11T-3	Carrier Shaft	
17*	F14V310		9V-3	Rocker Shaft	
18	F14U012		58U	Support Arm	
19	E14H192			Drip Tray	
20*	E14H312			Ductor Pivot (outside)	
21*	F14V312		32V-3	Adjustment Arm	
22*	F14V313		33V-3	Tie Rod - Rear	
50	LOOP001	(25)	OP1	Spring Clip	
51	LOLP004	(25)	LP4	Spring Clip	
52	LOCP013	(25)	CP13	Spring Clip	
53	M14R004	(25)		Spring Clip	
54	LOCP003	(25)	CP3	Spring Clip	
56*	LOCR082	(25)	CR82	Washer	
58	LOHS009	(25)	HS9	Screw M4 x 12mm	
59	L01E037	(5)	801E037B99	Adjustment Screw	
60	L005034	(10)	0534	Screw 1/4 in-20 UNC x 3/4 in	
61	L005162	(25)	0S162	Set Screw 1/4 in-28 UNF x 3/8 in	
62	L005250	(5)	0S250	Stud	
63*	LOCS420	(10)	CS420,0S19	Screw 8-32 UNC x 5/8 in	
64*	LOOW195	(4)	OW195	Adjustment Screw	
65*	100S036	(10)	0S36	Screw 1/4 in-20 UNC X 1 in	
66*	LOCS037	(5)	C5442	Screw 1/4 in-20 UNC x 1 in	
67	LOOT008	(25)	018	Nut 1/4 in-20 UNC	
72	L00U054	(10)	0U54	Spring	
73	L00U056	(5)	0U56	Spring - L.H.	
74	L00U057	(5)	0U57	Spring - R.H.	
75	LOHU102	(5)	HU102	Spring	
76	L00U069	(10)	0U69	Spring	
77*	LOHU108	(4)	HU108	Spring	
80*	L00W196	(2)	0W196	Nut	
81	L0OW013	(4)	0W13	Retaining Latch	
82	LOOW018	(25)	0W18	Spring Dowel 1/8 in dia. x 7/8 in	
83	M14V001	(25)		Spring Dowel 5/32 in dia. x 11/16 in	
84	L00W162	(5)	0W162	Plunger	
85	LOOW178	(5)	0W178	Pawl	
86	L00W179	(5)	OW179	Roller	
87*	LOOW180	(5)	0W180	Bush	
88	L03W114	(10)		Spring Peg	
89	L05E284	(5)		Label	

* 313 Parts

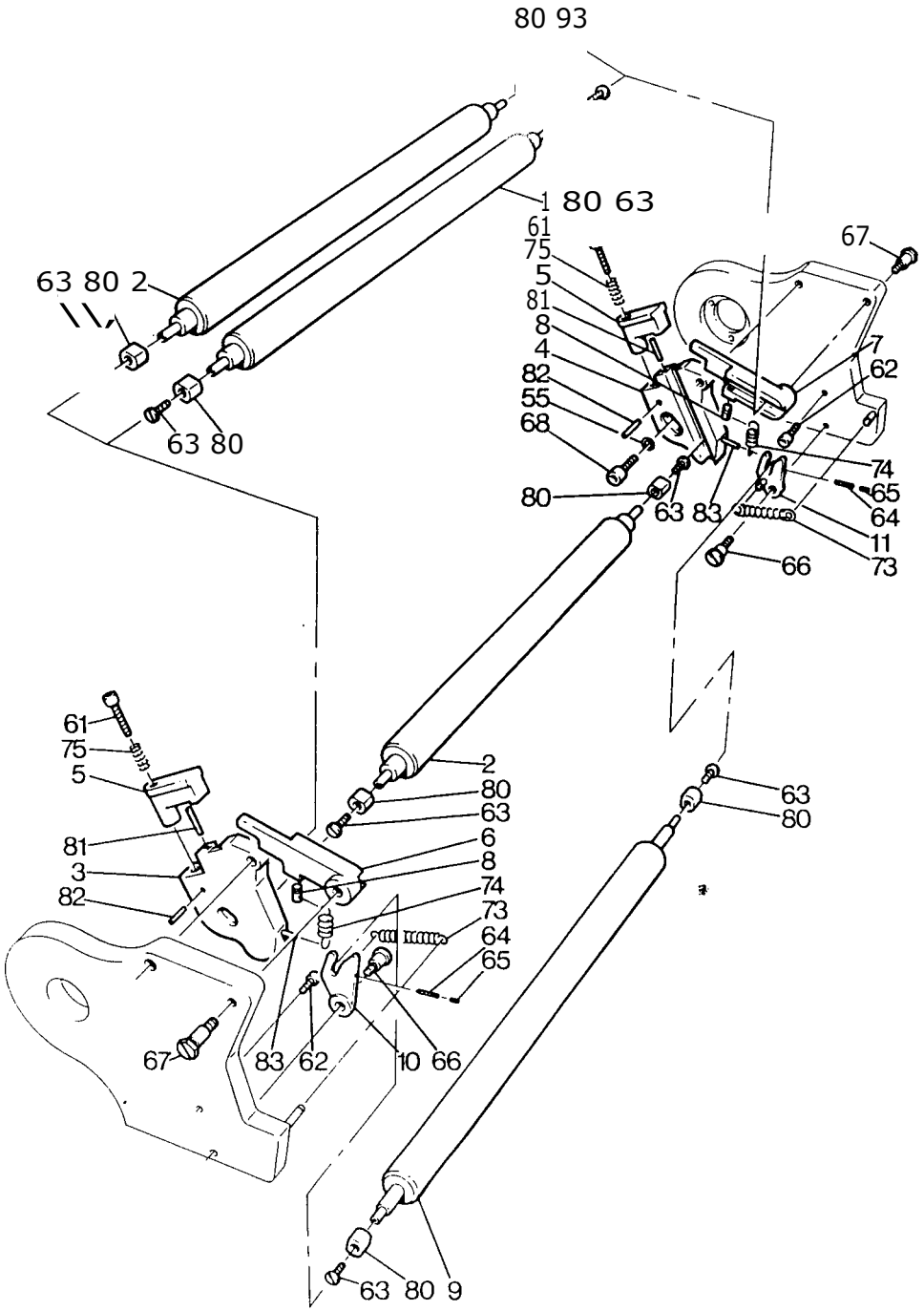

Index No.	Part No.		Equal to	Part	Serial No.
1*	E14H080			Upper Hard Idler Roller	
2*	E14H079			Upper and Lower Soft Idler Roller	
3	F14V040		302V	Carrier Plate - L.H.	
4	F14V041		303V	Carrier Plate - R.H.	
5	F14V042		290V	Retaining Block	
6	F14V043		273V	Carrier Slide - L.H.	
7	F14V044		274V	Carrier Slide - R.H.	
8	F14V045-		275V	Spring Peg	
9*	E14H081			Lower Hard Idler Roller	
10	E14H059		123V	Bearing Arm - L.H.	
11	E14H060		124V	Bearing Arm - R.H.	

* 313 Parts

55	L00R040	(10)	0R40	Washer	
56	L00R079	(10)	0R79	Shim Washer (as required) for 67	
61	L005026	(10)	0S26	Screw	10-32 UHF x 1.1/4 in
62	L00S053	(3)	0S53	Stop Screw	5/16 in-18 UNC x 1/2 in
63	L0HS071	(10)		Screw	
64	L00S182	(10)	0S182	Screw	6-32 UNC x 1/4 in
65	L00S186	(10)	0S186	Screw	6-32 UNC x 1/8 in
66	L005216	(5)	0S216	Pivot Screw	
67	L005217	(5)	0S217	Pivot Screw	
68	L005447	(10)	CS447,0550	Screw	1/4 in-20 UHF x 3/4 in
73	L00U070	(10)	0U70	Spring	
74	L00U071	(10)	0U71	Spring	
75	L00U072	(10)	0U72	Spring	
80	L0OW182	(10)	0W182	Bearing	
81	L0CW024	(25)	CW24	Spring Dowel 1/8 in dia. x 5/8 in - top	
82	L004024	(10)	0W24	Spirol Pin	$^{3}/_{32}$ in x 7/16 in
83	L0CW762	(25)	CW762,0W40	Spring Dowel 1/8 in dia. x 1/2 in - bottom	

HA

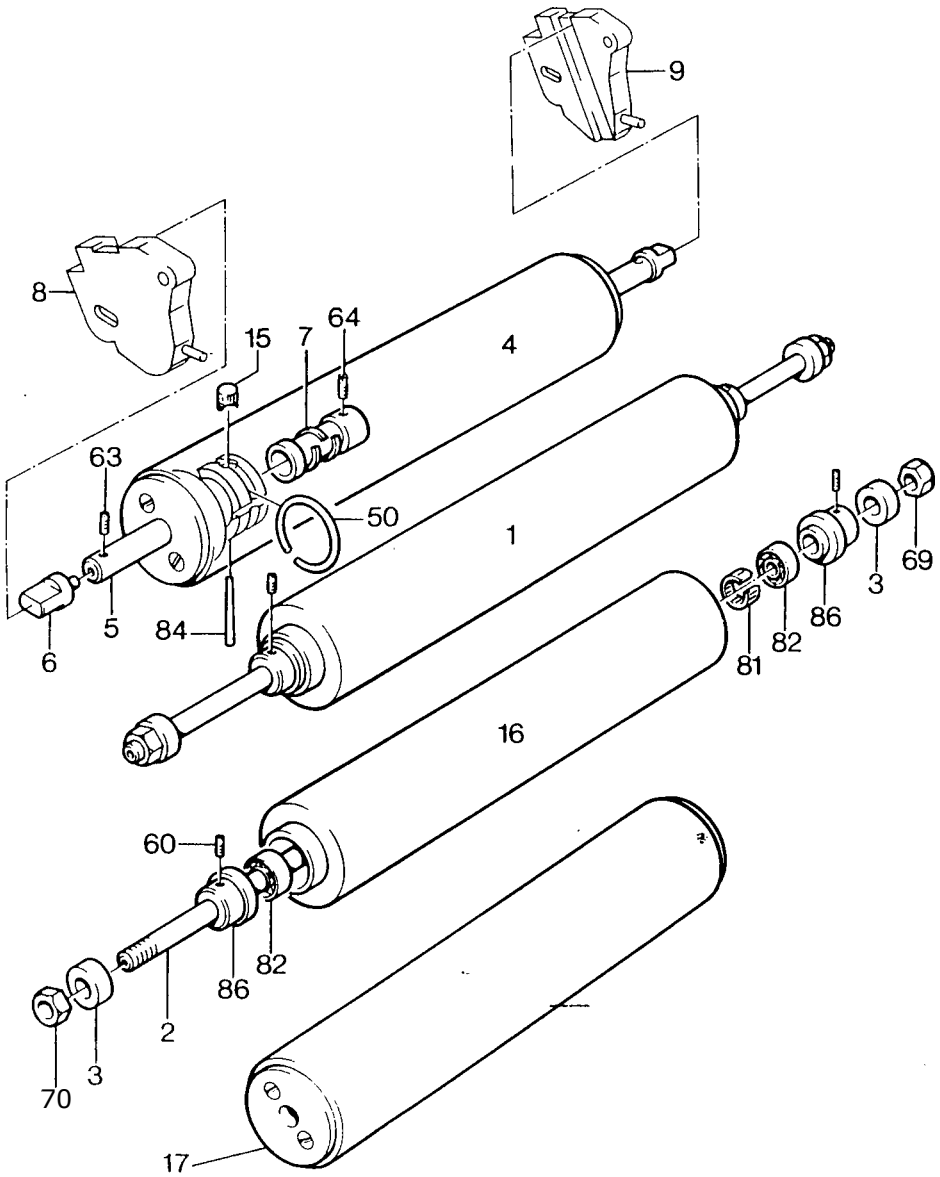

Index No.	Part NC	Equal to	Part	Serial No
1*	F14V3i,	15V-3	Forme Roller - complete with 2,, 16,60,69,70,81,82 and 86	
2	F14V315	19V-3	Spindle	
3	F14V060	181V	Locking Collar	
4*	F14V316	20V-3	Auxiliary Oscillating Roller - complete	
5*	F14V317	21V-3	Shaft	
6	F14V063	282V	Bearing	
7	F14V064	134V	Worm	
8	See 3,4 and 5 on H4		Carrier Plate - L.H.	
9	See 3,4 and 5 on H4		Carrier Plate - R.H.	
12	F14V069	140V	End Cap - L.H.	
15	F14V072	138V	Half Nut	
16*	F14V320		Forme Roller	
17	E14H269		Auxiliary Oscillating Roller Sub. Assembly with R.N. and L.H. End Caps	From 16D66

* 313 Parts

50	L00P023 (10)	0P23	Spring Clip	
60	L0HS008 (10)	HS8	Screw	M4 x 4mm
63	L00S164 (10)	0S164	Screw	10-32 UNF x 1/8 in
64	L00S263 (10)	0S263	Screw	
69	L00T028 (10)	0728	Nut	$^3/_8$ in-24 UNF
70	M14V006 (10)		Nut - L.H.	3/8 in-24 UNF
81	L0OW014 (4)	0W14	Tolerance Ring	
82	L0OW022 (2)	0W22	Bearing	
84	L0OW032 (25)	0W32	Spring Dowel 3/32 in dia. x 7/16 in	
86	L0HW207 (2)	HW207	Retaining Collar	

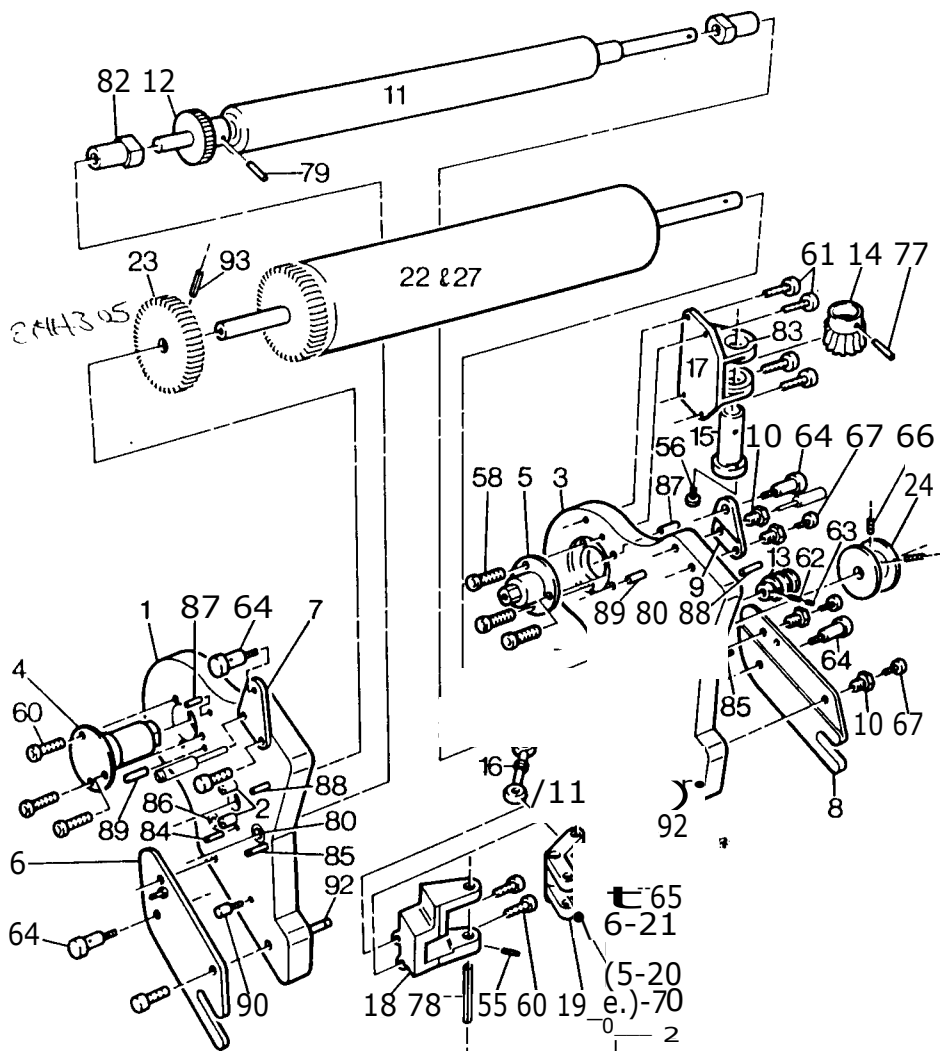

Index No.	Part	Equal to	Part	Serial N(
1	E14H182		Side Frame - L.H. - complete with 80,82,84,85,86,87,88,89,90 and 92	
2	F14V003	7V	Stud	
3	E14H183		Side Frame - R.H. - complete with 80,82,85,86,87,88,89, and 92	
4*	E14H168	25V-3	Ink Fountain Roller Bearing - L.H.	
5*	E14H170	26V-3	Ink Fountain Roller Bearing - R.H.	
6	F14V085	36V	Side Plate - bottom L.H. side	
7	F14V086	231V	Fixing Plate - top L.H. side	
8	F14V087	215V	Side Plate - bottom R.H. side	
9	F14V088	214V	Fixing Plate - top R.H. side	
10	F14S018	46S,185V	Adjusting Nut	
11*	F14V321	22V-3	Ink Distributor Roller - complete with 12 and 79	
12*	F14V322	23V-3	Gear (half drilled)	
13	F14V091	190V	Worm	
14	E14H055		Worm Wheel	
15	F14V092	194V	Eccentric Shaft	
16	F14V093	197V	Connecting Rod	
17	F14V094	195V	Bracket	
18	F14V095	203V	Bracket	
19	F14V096	200V	Bell Crank	
20	F14V097	208V	Driving Roller	
21	F14U040	129U,205V	Ball Race	
22*	E14H245		Main Oscillating Roller	
24	F141J037	135U	Guide Wheel	
25*	E14H198		Ink Unit - complete (not shown) comprising all parts shown on frames H2-H7	
26	E14H305		Gear	
27	E14H311		Main Oscillating Roller - only	

* 313 Parts

un

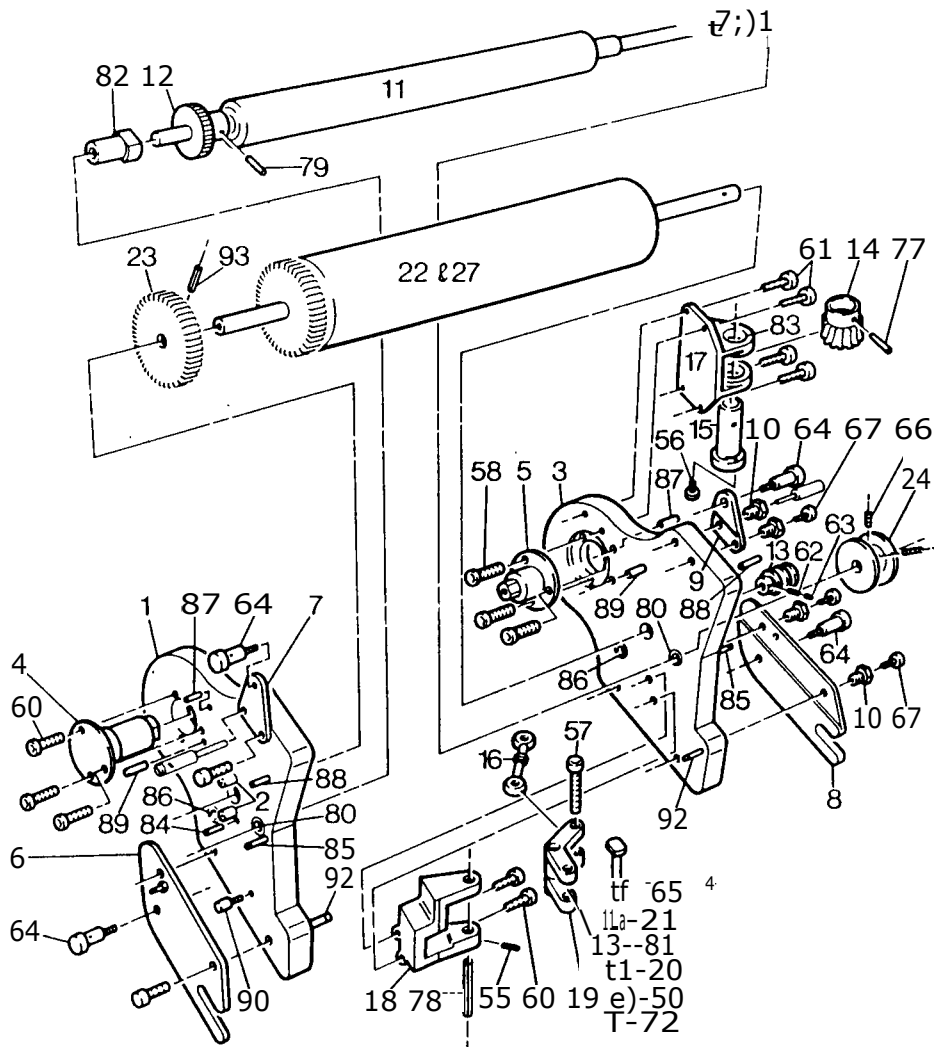

Index No.	Part 'o.		Equal to	Part	Serial No
50	LOCR003	(25)	CR3	Lock Washer	
55	L00S178	(10)	0S178	Screw	8-32 UNC x 3/16 in
56	M14A009	(25)	0S10	Screw	10-32 UNF x 5/8 in
57	L005013	(10)	0S13	Screw	10-32 UNF x 1 in
58	L005014	(25)	0S14	Screw	10-24 UNC x 3/8 in
60	LOOS017	(25)	0S17	Screw	10-24 UNC x 3/4 in
61	L005447	(10)	C5447	Screw	1/4 in-28 UNF x 3/4 in
62	L005166	(25)	05166	Screw	10-32 UNF x 1/4 in
63	L005386	(10)	C5386	Lock Screw	10-32 UNF x 1/8 in
64	L005219	(3)	05219	Locking Screw	
65	L00S220	(3)	0S220	Screw	
66	L005399	(10)	CS399	Screw	10-32 UNF x 3/16 in
67	L00S034	(10)	0S34	Screw	1/4 in-20 UNC x 3/4 in
72	L001023	(10)	0T23	Nut	10-32 UNF
77	LOOW004	(25)	0W4	Taper Pin	No.1 x 1.1/4 in
78	LOOW017	(5)	OW17	Pivot Pin	
79*	LOOW026	(25)	0W26	Roll Dowel	3/32 in dia. x 11/16 in
80	LOOW158	(10)	0W158	Bush	
81	LOOW183	(5)	0W183	Distance Collar	
82	LOOW184	(5)	0W184	Bearing	
83	LOOW185	(5)	0W185	Bush	
84	LOOW047	(25)	0W47	Spring Dowel	5/32 in dia. x 1.3/4 in
85	L03W067	(5)		Spring Peg	
86	LOOW180	(5)	0W180	Bush	
87	LOOW044	(25)	0W44	Spring Dowel	5/32 in dia. x 3/4 in
88	LOOW064	(5)	0W64	Spring Peg	
89	LOOW065	(5)	0W65	Spring Peg	
90	L03W114	(10)		Spring Peg	
92	M14V002	(5)	22V	Spring Peg	
93	LOOW046	(25)	0W46	-Spring Dowel	5/32 in dia. x 1 in
94	LOOW158	(10)	0W158	Bush (not shown)	

* 313 Parts

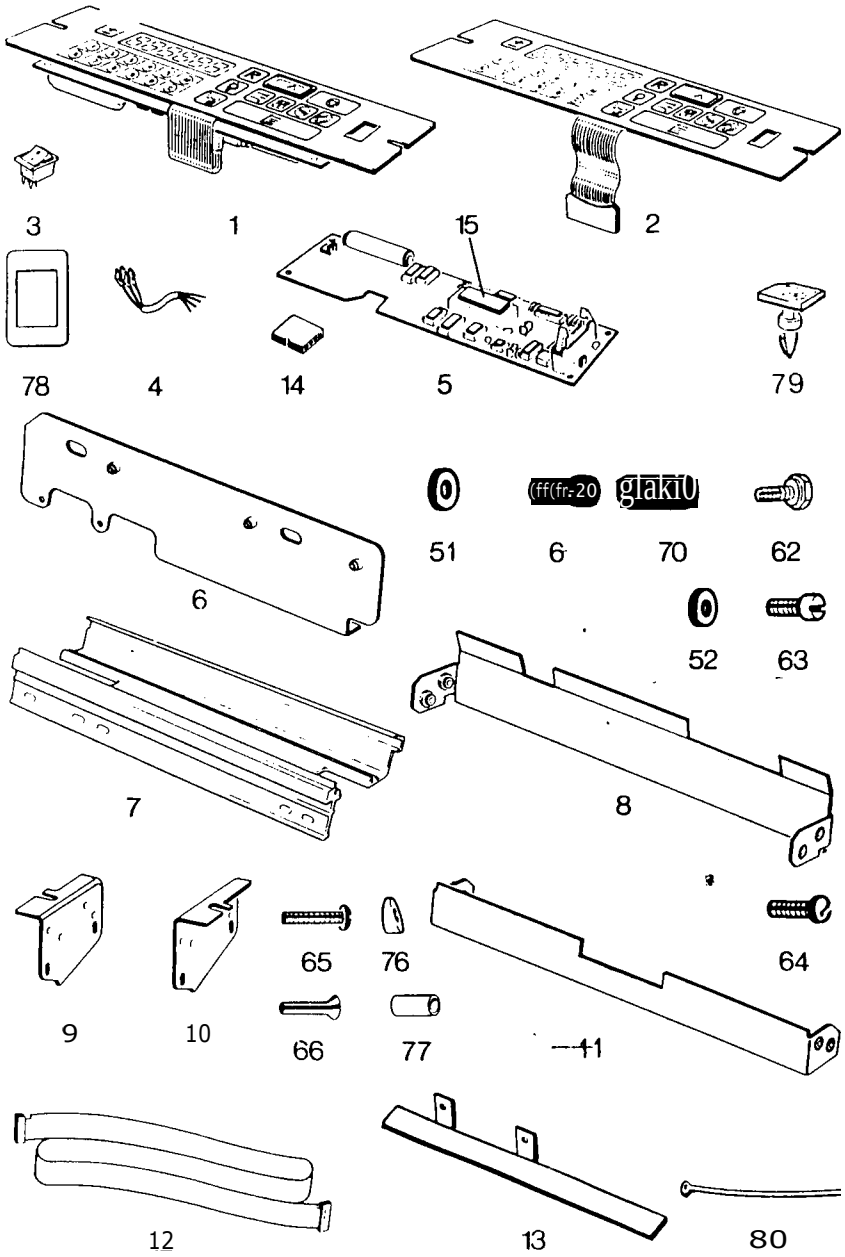

Index No.	Part No.		Equal to	Part		Serial No.
1	E14R298			Control Panel Assy.		
2	E14R297			Control Panel for 1		
3	F14W032			Mains On/Off Switch for 1		
4	E14R231			Harness for 3		
5	E14R186			P.C.B. for 1		
6*	E14N185			Back Plate for 7'		
7	E14N074			Support for 8 and 11		
8	E14N076			Back Support		
9	E14N069			L.H. Support for 8 and 11		
10	E14N068			R.H. Support for 8 and 11		
11	E14N077			Front Support		
12	E14R227			Ribbon Cable Assembly for 1 (20 Way)		
13	El4R209			Bracket for 12 - complete with 75		
14	F14W026			Connector for 4 (4 way)		
15	E14R223			Microprocessor for 5		From 15D368

* 313 Parts

51	LOOR025	(10)	OR25	Washer for 61	
52	LOCR108	(10)	CR108	Washer for 63	
61	LOOS004	(25)	OS4	Screw for 6	8-32 UNC x 1/2 in
62	M14W013	(10)		Screw (Taptite) for 7	8-32 UNC x 3/8 in
63	LOCS407	(10)	CS407	Screw for 7	8-32 UNC x 3/8 in
64	LOHS215	(10)	HS215	Screw for 8, 9,10 and 11	8-32 UNC x 1/4 in
65	M14A007	(10)		Screw for 9	10-24 (INC x 1/2 in
66	LOOS020	(10)	OS20	Screw for 10	10-24 UNC x 1.1/2 in
70	LO1J016	(10)		Nut for 61	8-32 UNC
76	Pl4N072	(10)		Spacer for 9 and 10	
77	LOCW877	(4)	CW877	Spacer for 10	
78	LO5E290	(5)		On/Off Label (French)	
79	P14R299	(4)		Support for 2	
80	LOHW236	(4)	HW236	Tie for 12	

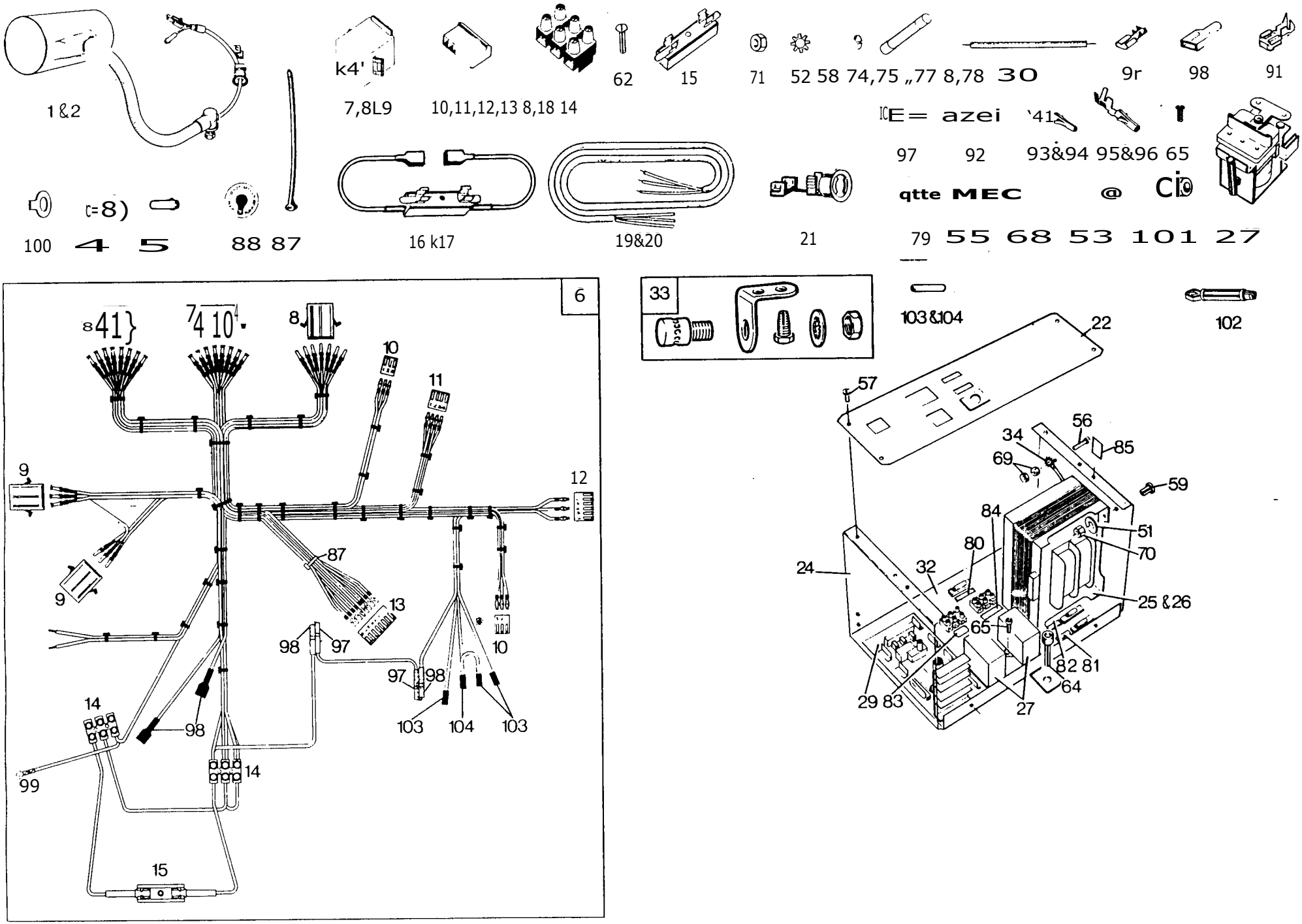
1 &2
k4'
7,8L9
10,11,12,13 8,18 14
62
15
71
52 58 74,75 „77 8,78
30
9r
98
91
E= azei
97
92
93&94 95&96 65
qtte MEC
@
100
4 5
88 87
16 k17
19&20
21
79
55 68 53 101 27
6
33
103&104
102
22
57
56
34
85
69
59
84
51
80
70
24
32
25 &26
65
82 81
64
29 83
27
9
12
87
13
98
97
10
14
99
103
104
15

J4

Index No.	Part No.		Equal to	Part	Serial No.
1	, 194			Lamp Unit complete - 200V ge	
2	E14R200			Lamp Unit complete - 100V Range (UL and CSA)	
4	F14W008			2 Pin Connector for 1 and 2	
5	F14W009			1 Pin Connector for 1 and 2	
6	E14R224			Wiring Harness for 24 - complete with 7-15	
7	F14W010			Connector	
8	F14W011		6876-S	Connector	
9	F14W012			Connector - 3 way	
10	F14W013			Connector - 3 way	
11	F14W014			Connector - 4 way	
12	F14W015			Connector - 6 way Polarised	
13	F14W016		286161788P	Connector - 8 way	
14	F14W017			Block - 3 way	
15	F14W018		282160227P	Fuse Holder (Mains) 200V Range 50 Hz	
16	E14R234			Fuse Holder (Vacuum Motor) 200V Range 50 Hz	
17	E14R233			Fuse Holder (Drive Motor) 200V Range 50 Hz	
18	F14W019			Connector - 6 way for 25 and 26	
19	E14R226			Mains Lead for 14 200V Range	
20	E14R225			Mains Lead for 14 (CSA) 100V Range	
21	F14A002			Strain Relief for 1,2,19 and 20	
22	E14N114			Plate for 24	
23	E14N113			Bracket for 24	
24	E14N118			Box	
25	E14R228			Transformer 200V Range 50/60 Hz	
26	E14R229			Transformer 100V Range 50/60 Hz (CsA and UL)	
27	F14W020			Relay (Drive and Vacuum Motors) 100/200V Range 50/60 Hz	
29	E14R185			P.C.B.	
30	E06A258			Bridging Wire for 14	
31	E14N117			Cover for 24	
32	E14N120			Insulation Panel	
33	F14W031			Bracket Assembly for 1 and 2	
51	LOCR153	(10)	CR153	Washer for 70	
52	LOLR003	(25)	LR3	Washer for 71	
53	LOOR015	(10)	OR15	Washer for 68 4	
55	LOOS130	(5)	OS130	Screw for 101 6-32 UNC x 1 in	
56	M14W033	(10)		Screw for 24 M4 x 16mm (earth)	
57	LOCS379	(10)	CS379	Screw for 22, 8-32 UNC x 5/16 in and 24	
58	M14W006	(10)		Screw for 15, 4-40 UNC x 3/8 in 16 and 17	
59	LOOS120	(10)	OS120	Screw for 25 10-24 UNC x 3/8 in and 26	
60	M14W009	(10)		Screw for 23 1/4 in-20 UNC x 3/8 in	
62	M14W008	(10)		Screw for 14 8-32 UNC x 3/4 in	
64	M14W011	(10)		Screw for 24 M10 x 20mm	
65	LOOS115	(10)	OS115	Screw for 27 6-32 UNC x 3/8 in	

Index No.	Part No.		Equal to	Part	Serial N
68	LODT001		DT1	Nut for 55 6-32 UNC	
69	LOHT009	(25)	HT9	Nut for 56 M4	
70	LOHT019	(10)	HT19	Nut for 59 10-24 UNC	
71	LOCT072	(10)	CT72	Nut for 58 4-40 UNC	
74	LOHW186	(5)	HW186	Fuse for 29 2A 250V Quick Acting	
75	LOHW387	(5)	HW387	Fuse for 29 7A Anti-surge	
77	M14W002	(-5)		Fuse for 15 15A 250V (HV 50 Hz)	
78	M14W003	(5)		Fuse for 16 Anti-surge 8A 250V and 7 (HV 50 Hz)	
79	10CW473	(2)	CW473	Clip for 19 and 20	
80	LO5E337	(10)		Mains Fuse Label HV 50 Hz	
81	LO5E338	(10)		Fuse Label (Drive NV 50 Hz Motor)	
82	LO5E339	(10)		Fuse Label (Vacuum NV 50 Hz Motor)	
83	LO5E340	(10)		Power P.C.B. Label	
84	LO5E341	(10)		Mains Label	
85	LOHW388	(10)	HW388	Earth Label	
86	M14W007	(5)	3029WT	Label for 31	
87	LOW104	(10)	HW104	Tie for 6	
88	LO5E342	(10)		Lamp Rating Label for 1 and 2 (60 Watts)	
90	M14W018	(10)		Terminal for 6,27 and 28	
91	M14W027	(10)		Terminal for 27 and 28	
92	M14W028	(10)		Terminal for 10,11,12,13 and 18	
93	M14W021	(10)		Pin for 9	
94	M14W022	(10)		Pin for 1 and 8	
95	M14W023	(10)		Socket for 9	
96	M14W024	(10)		Socket for 7 and 8	
97	LOHW259	(10)	HW259	Boot for 91	
98	LOCW495	(25)	CW495	Boot for 89 and 90	
99	M14W016	(10)		Eyelet for 6	
100	M14W030	(10)		Eyelet for 1	
101	P14R262	(5)		Spacer for 29	
102	M14W001	(10)		Support for 29	
103	LOLW063	(10)	LW63	Sleeve for 6	
104	M14W032	(10)		Sleeve for 6	

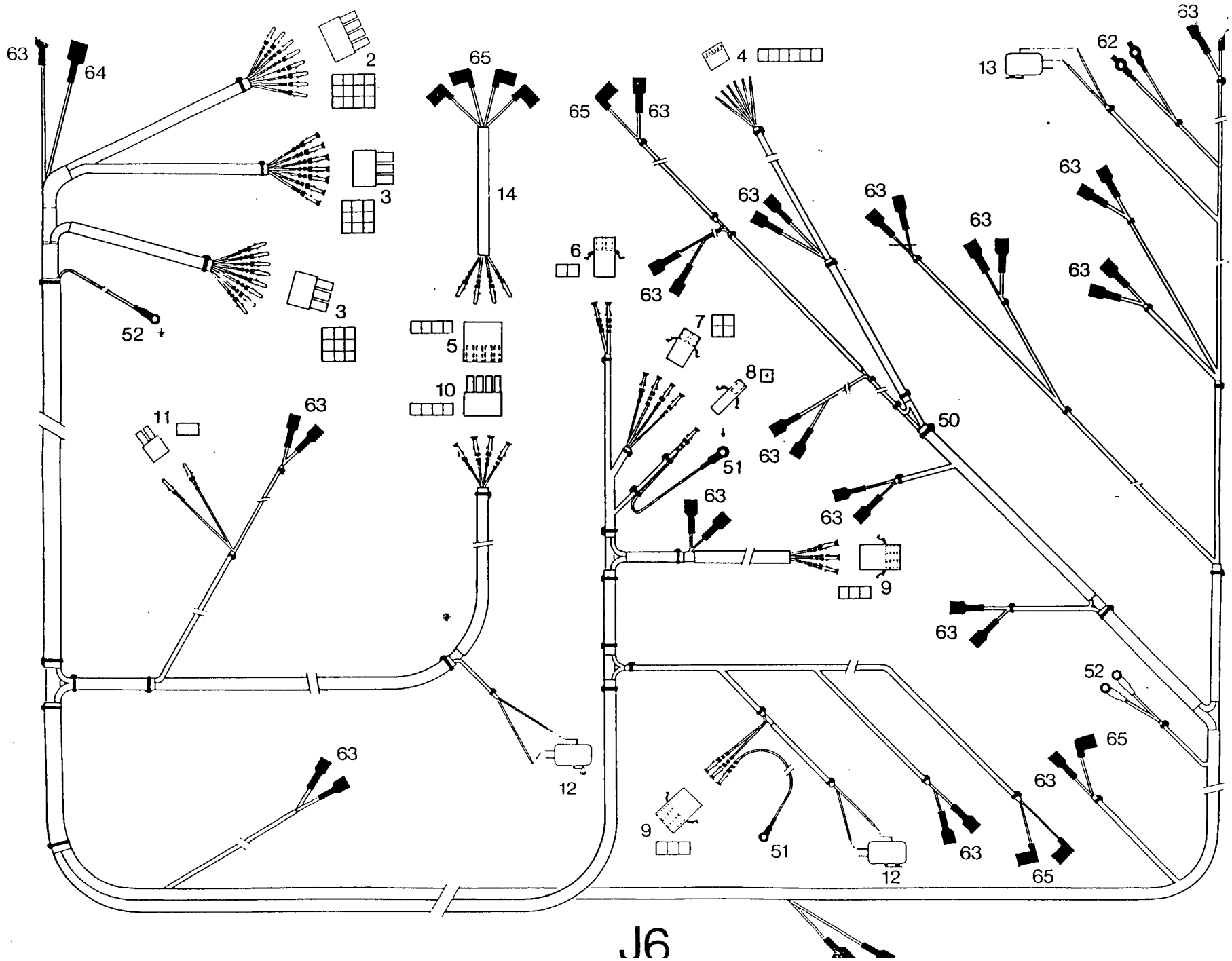
63
64
2
3
3
52
11
63
63
65
14
5
10
12
65
63
4
6
63
7
8
51
63
63
9
50
63
63
63
63
63
13
62
63
52
65
63
65
63
9
51
12

J6

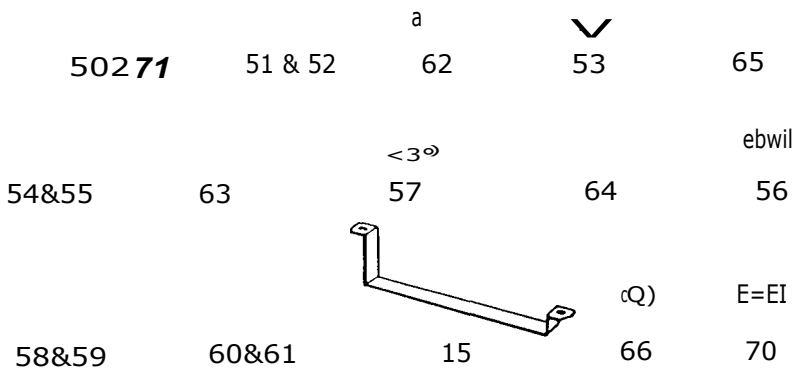

Serial No.

Index No.	Part No.	Equal to	Part
1	E14R 230		Main Wiring Harness Asses bly - co m plete with 2-14 and 50-65
2	F14W 023		Connector - 12 way
3	F14W 024		Connector - 9 way
4	F14W025		Connector - 6 way
5	F14W026		Connector - 4 -way
6	F14W027		Connector - 2 way
7	F14W 028		Connector - 4 way
8	F14W029		Connector - 1 way
9	F14W012		Connector - 3 way
10	F14W030		Connector - 4 way
11	F14W008		Connector - 2 way
12	F14A011		Microswitch (2 **Sheet Door)**
13	**F14A009**		**Microswitch (L.H. and R.H. Back Guard)**
14	**E14R 231**		**Harness for On/Off Switch**
15	**E14R 261**		**Support Bracket for 1**
50	**LOH W 104 (10)**	**H W 104**	**Tie for 1**
51	**M 14W 031 (10)**		**Earth Eyelet for 1**
52	**M144 016 (10)**		**Earth Eyelet for 1**
53	**LOH14023 (10)**	**H W 23**	**Ter•inal for 1 and 14**
54	**M1414017 (10)**		**Terminal for 1**
55	**M1414018 (10)**		**Ter•inal for 1**
56	**141414019 (10)**		**Insert for 4**
57	**M1414020 (10)**		**Tab for 1**
58	**P11414021 (10)**		**Pin** for 3
59	M 14W 022 (10)		Pin for 2,3,5 and 6
60	PI1414023 (10)		Socket for 6,7 and 8
61	P11414024 (10)		Socket for 3,6,7,9 and 10
62	P11414025 (10)		Sleeve for 52
63	LOC 14495 (25)	C 14495	Boot for 54 and 55
64	P1 13V006 (10)		Boot for 57
65	LOH W 025 (10)	111425	Boot for 53
66	PI1414034 (5)		Spacer for 15
70	LOOS005 (10)	0S5	Screw for 15 8-32 UN C x 3/4 in

3.

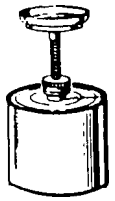

1

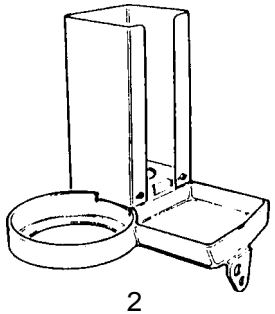

2

3

O .3 @

50 56 51

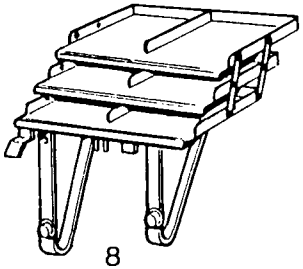

8

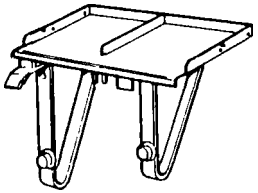

9

14

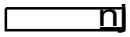

15

19

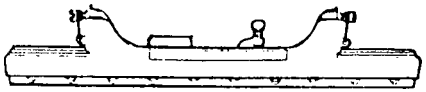

17

CED

20

(=9

50 51 56

Index No.	Part No.		Equal to	Part	Serial
1	E10P030			Blank ind Roller Wash Dispense ,-	
2	E10P029			Dispenser Tray	
3	F148012		38X	Screw for 2	
50	LOCR005	(25)	CR5	Lock Washer for 56	
51	LOOR003	(25)	0R3	Washer for 56	
56	LOCT060	(25)	CT60	Nut for 3 1/4 in UNF	
8	E10P033			Work Tray - 3 Tier - complete	
9	E10P034			Work Tray - 1 Tier - complete	
10	F148013		278	Rubber Mat (not shown)	
14	E14U017		1X-3	Anti-static Unit - complete with 15	
15	F148014		31X	Spring Peg for 14	
17	E148052			Straight Edge Tail Clamp	
19	E14E130		229G	Sucker for Items 15 and 16 on 85 and 35 on C5	
50	LOCS421	(10)	C5421	Screw for 1 6-32 UNC x 5/16 in	
51	L01A034	(10)		Screw for 1 8-32 UNC x 1/4 in	
56	L04A096	(10)		Spring for 1	
20	F148032		28V-3	Dust Cover for Ink Unit	
21	F14B344			Machine Dust Cover (not shown)	

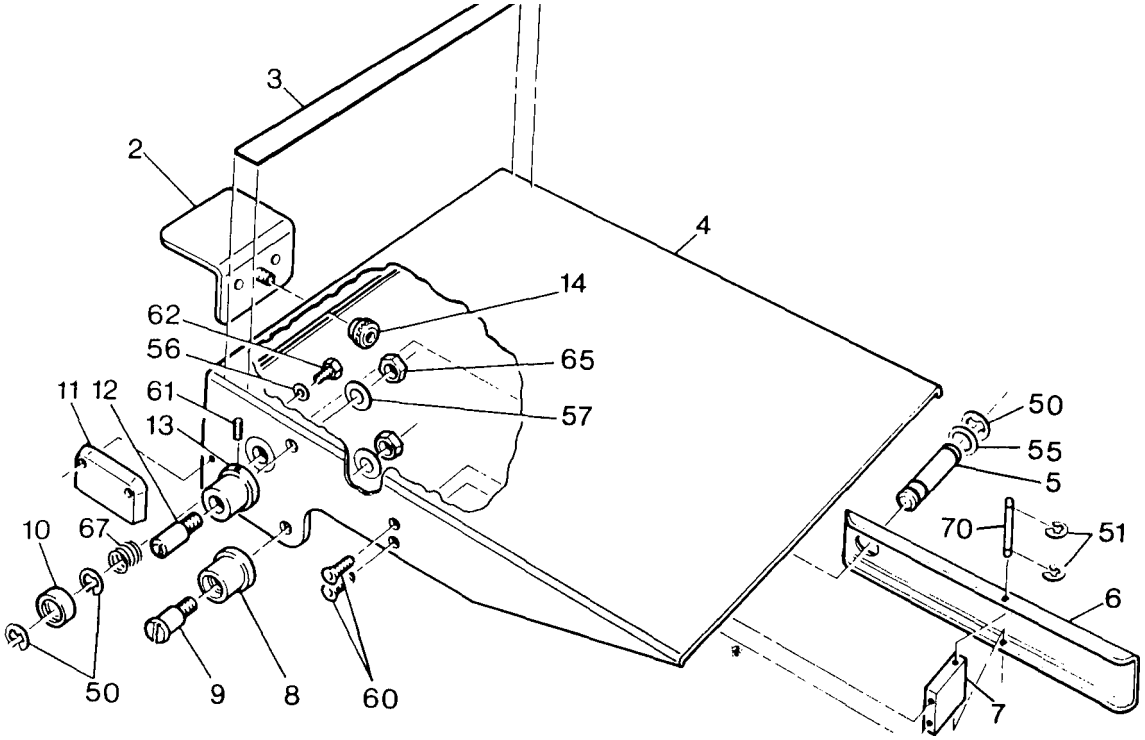

Index No.	Part No.		Equal to	Part		Seria
1*	E14F068			Feedboard - complete (not shown)		
2	E14F032			Bracket		
3*	E05E464			Scale		
4*	E14F063			Feedboard		
5	E14F073			Spindle		
6	E14F029			Arm		
7	E14F031			Block		
8	E14F071			Lower Roller		
9	E01E068			Screw		
10	E14F055			Roller		
11	E14E145			Bar		
12	E01E070			Screw		
13	E14F054			Top Roller		
14	E01J021			Nut		
50	LOLP005	(10)	LP5	Spring Clip		
51	M14R004	(25)		Spring Clip		
55	LOCR156	(10)	CR156,HR25	Washer		
56	LOCR037	(25)	CR037	Washer		
57	M14F006	(25)		Washer		
60	M14F004	(25)		Screw	4-40 UNC x 3/8 in	
61	L005168	(10)	0S168	Screw	10-32 UNF x 3/8 in	
62	M14F005	(10)		Screw	10-24 UNC x 3/8 in	
65	LOHT050	(10)	HT50,0T9	Nut	1/4 in-20 UNC	
67	L04E075	(5)		Spring		
70	L035265	(5)		Pin		

* 313 Parts

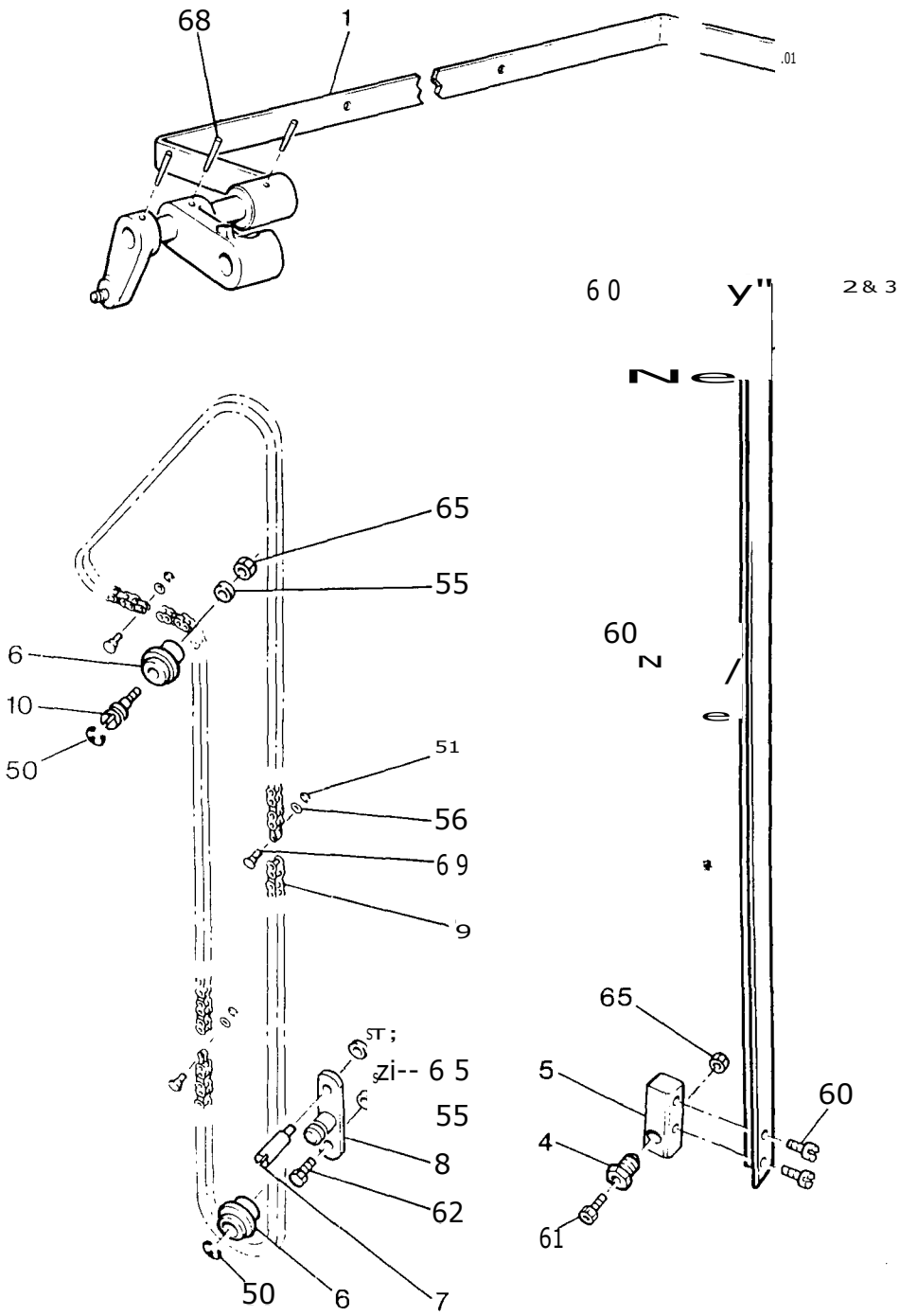

Index No.	part No.		Equal to	Part		Serial N
1*	E14F067			Height Contr.:7,1 Bar		
2	E14F036			Guide Rail – R.H.		
3	E14F037			Guide Rail – L.H.		
4	See 84,5			Adjusting Screw		
5	E14F051			Block		
6	See 87,9			Roller		
7	E14F043			Stop		
8	E14F041			Plate		
9	E14F039			Chain		
10	E01E069			Stud		
50	LOCP006	(25)	CP6	Spring Clip		
51	M14F007	(25)		Spring Clip		
55	M14F006	(25)		Washer		
56	L02A025	(25)		Washer		
60	LOOS120	(10)	OS120	Screw	10-24 UNC x 3/8 in	
61	L00S036	(10)	OS36	Screw	1/4 in-20 UNC x 1 in	
62				Screw	1/4 in-20 UNC x 1/2 in	
65	LOHT050	(10)	HT50,019	Nut	1/4 in – 20 UNC	
68	M14J005	(10)		Taper Pin	11/64 in dia. x 3/4 in	
69	L14F040	(5)		Stud		

313 Part

VA

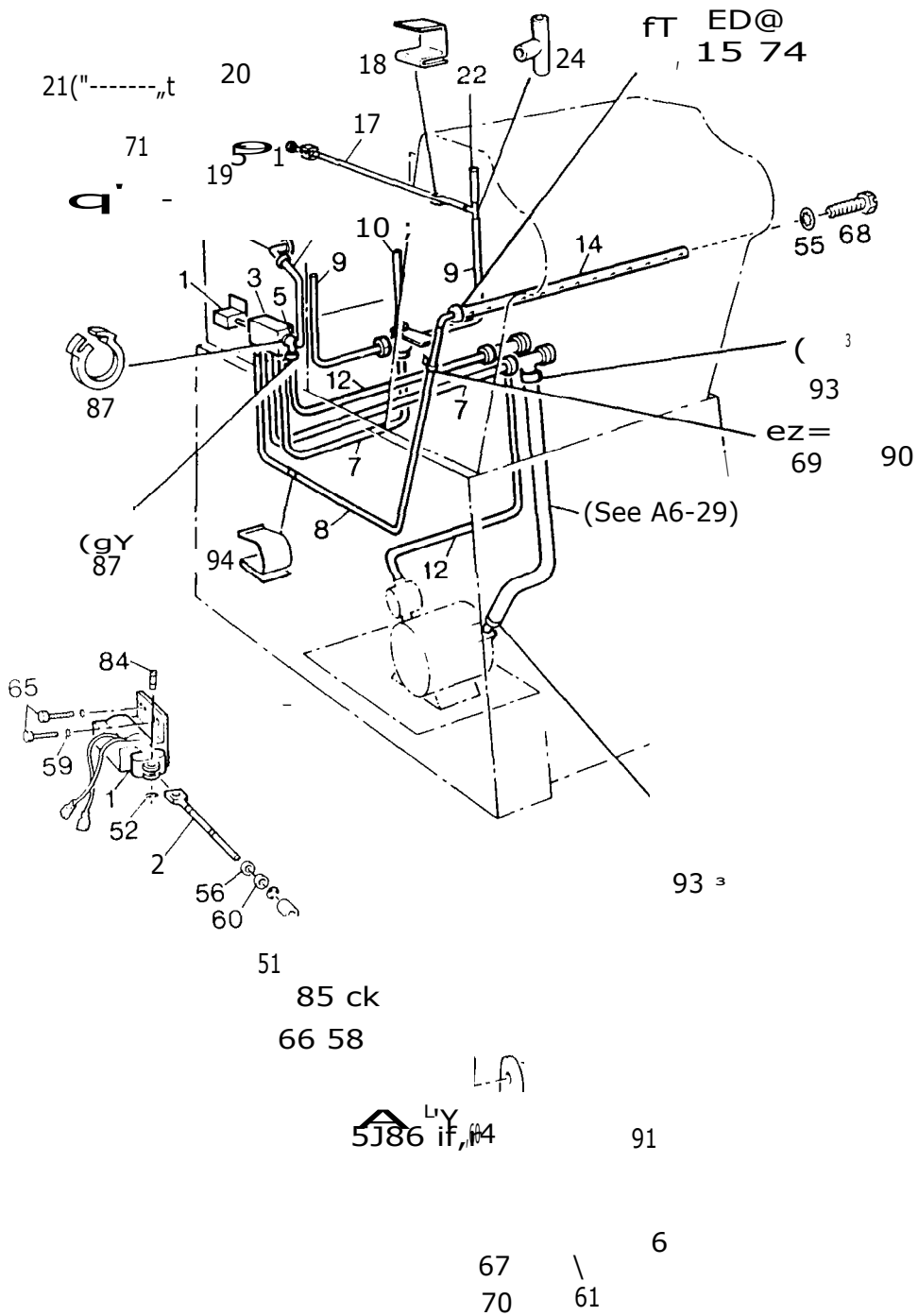

lodex No.	Part	Equal to	Part		Serial fic 16D582
1	E14R218		Solenoid	22-29V	
2	E141021		Shaft		
3	E141019		Manifold		
4	E141015		Vacuum Shut-off Assembly		
5	E141018		3-way valve for Vacuum Pipe		
6	E141017		Bracket		
7	E141032		Air Pipe from 3 to 4-way Coupling and from 3 to Air Control Valve	23 in	
8	E147035		Air Pipe from 3 to 14	49 in	
9	E14T033		Left and Right Blower Pipe	16 in	
10	E147034		Centre Blower Pipe	10 in	
11	E1411130		Vacuum Pipe for 5 and 13	13.1/4 in	
12*	E147049		VIZUDIm Pipe from Filter and 5 to Control Valve	18.1/4 in	
13	F14H004	5641	Connecting Tube		
14	E14T053		Spray Tube		
15	E141024		Connecting Tube		
16	E147023		Elbow		
17*	F14C305	3C-3	Hose for 21 26 in		
18*	F14C306	7C-3	Retaining Clip for 17		
19*	F14C307	8C-3	Bracket for 21		
20*	F14C308	9C-3	Retaining Plate for 19		
21*	F14C309	10C-3	Side Blower		
22*	F14C310	4C-3	Left and Right Blower Pipe 8 in		
24*	F14C312		Tee Hose Connector		

* 313 Parts

50	LOOP002	(25)	OP2	Spring Clip	
51	LOLP003	(25)	LP3	Spring Clip	
52	LOCP009	(25)	CP9	Spring Clip	
55	LOCR079	(10)	CR79	Lock Washer	
56	LOOR014	(25)	OR14	Washer	
57	LOOR003	(25)	OR3	Washer	
58	M14A011	(25)		Lock Washer	
59	LOOR067	(25)	OR67	Lock Washer	
60	LOCR058	(25)	CR58	Washer (plastic)	
61	LOOR066	(25)	OR66	Lock Washer	
65	LOOS003	(10)	0S3	Screw	8-32 UNC x 3/8 in
66	M14F003	(10)		Screw	8-32 UNC x 1.1/4 in
67	LOOS036	(10)	0536	Screw	1/4 in-20 UNC x 1 in
68	M14F002	(10)		Screw	3/8 in-16 UNC x 1.1/4 in
69	LOOS098	(10)	0S98	Screw	8-32 UNC x 5/8 in
70	LOOS032	(25)	0S32	Screw	1/4 in-20 UNC x 1/2 In
71	LOOS009	(25)	0S9	Screw	10-32 UNF x 1/2 in
74	LOOT017	(10)	OT17	Nut	3/8 in-16 UNC
79	LO4A149	(5)		Spring	
84	LO3S211	(5)		Peg	
85	P14T022	(5)		Piston	
86	LO2J131	(5)	802J131Y00	Spacer	
87	LOOW072	(3)	ow72	Clamp	
88	M14C002	(5)		Clamp	
90	LOOW188	(10)	OW188	Clip	
91	LO3W081	(5)		Spring Peg	
92	LOHW145	(4)	HW145	Pad	
93	LOHw410	(5)	HW410	Clamp	
94	M14C004	(10)		Edge Clip	

KA

L...

1,2,3,4&5

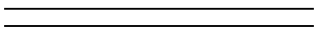

6

7

8

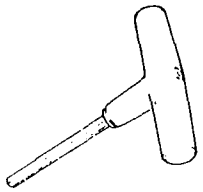

9

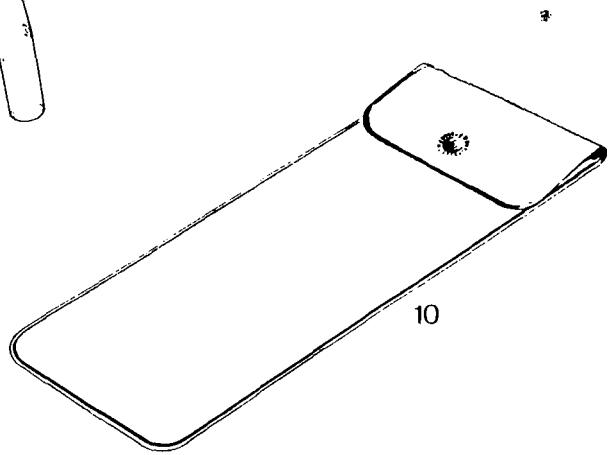

10

Index No.	Part No.	Equal to	Part
1	1503		Allen Key - 3/32 in
2	1504		Allen Key - 1/8 in
3	1505		Allen Key - 5/32 in
4	F14T029		Allen Key - 4mm
5	T506		Allen Key - 3/36 in
6	1513		Spanner - 3/8 in & 7/16 in
7	7576		Setting Strips (Pack of 10)
8	6X		Ink Knife
9	E00H025		T. Bar - 5/32 in
10	51X		Tool Pouch

Serial N

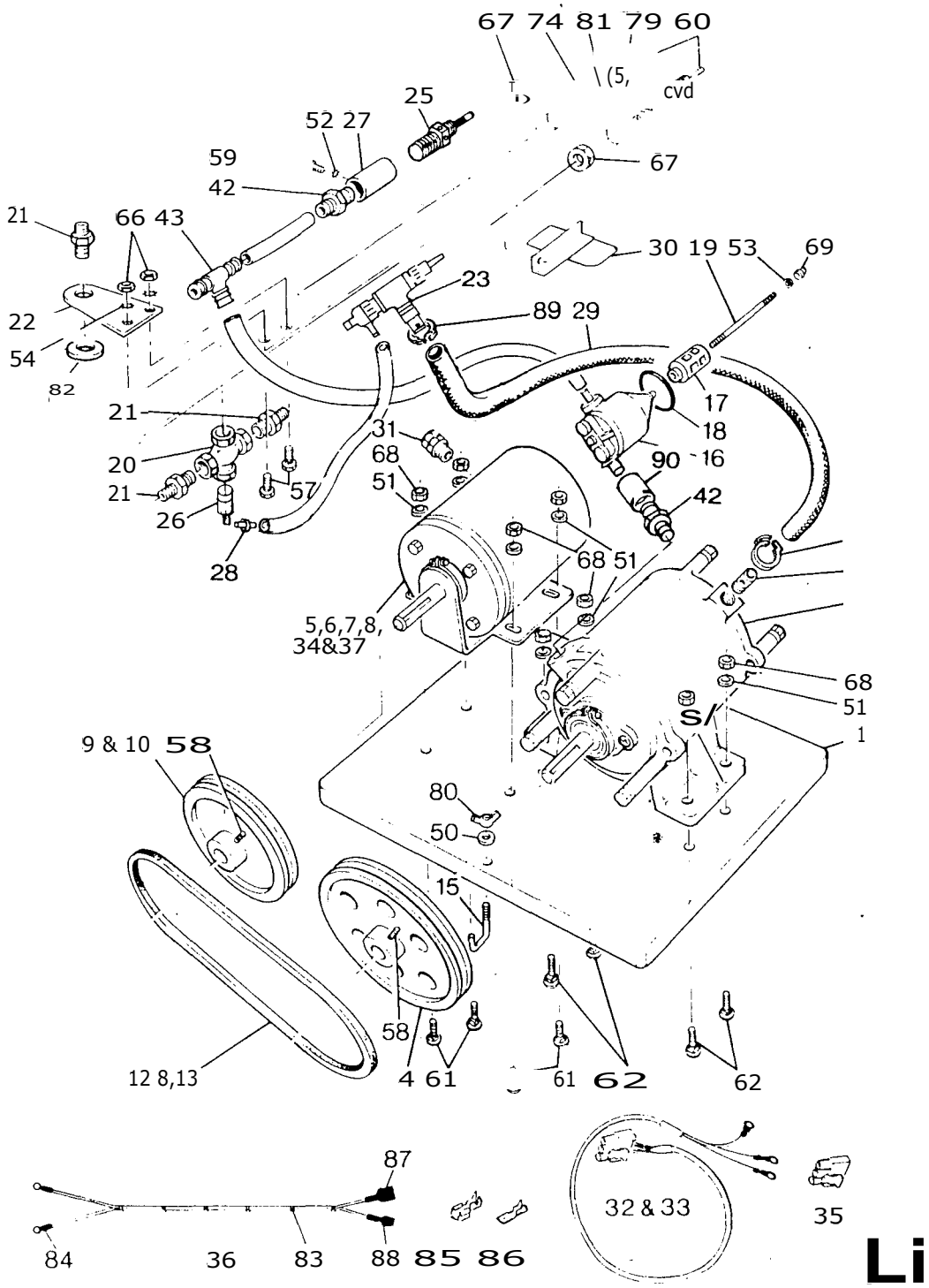

Index No.	Part No.	Equal to	Part	
1	F14C001	103C	Base Board	
2	E1,4006	9147006L99	Vacuum Pump	
3	F14C002	95C	Adaptor	
4	E147007	9141007G99	Pulley	
5*	F14E012	4E-3	Motor 1/2 h.p.	100V/110V 50 Hz
6*	F14E013	6E-3	Motor 1/2 h.p.	200V/220V 60 Hz
7*	F14E014	9E-3	Motor 1/2 h.p.	220V/240V 50 Hz
8*	F14E015	10E-3	Motor 1/2 h.p.	100V 50 Hz/60 Hz
9*	E141043		Pulley	50 Hz
10*	E141044		Pulley	60 Hz
12*	F14C010	6C	'V' Belt (Motor to Pump)	50 Hz
13*	F14C304		'V' Belt (Motor to Pump)	60 Hz
15	F14C013	7C	Clamp	
16	E147065		Filter	
17	F14C014	96C	Element	
18	E147010	9147010G99	Sealing Washer	
19	E147011	9147011C99	Stud	
20	F14C015	16C	Coupling	
21	F14C016	17C	Adaptor	
22	E141014		Bracket	
23	E141070		Air Valve Assembly	
25	F147057		Valve Body	
26	E147051		Vacuum Tee	
27	F14C021	101C	Connector	
28	F147059		Vacuum Valve Spindle	
29	F14C025	102C	Air Hose	533mm (21 in)
30	F14C024	84C	Cover	
31	F14E021	122W	Gland	
32	E14R214		Lead for 5,6,7 and 37	
33	E14R215		Lead 8 and 34	
34*	F14E023	5E-3	Motor 1/2 h.p.	110/120V 60 Hz (CSA)
35	F14E026		Plug for 32 and 33	
36	E14R259		Thermal Cut-out Harness (CSA & UL) for 34	
37	F14E029		Motor 1/2 h.p.	Dual Voltage 50 Hz
40	F14C028		Adaptor	
41	F14C030		Tee	
42	F14C032		Adaptor	
43	F14C031		Vacuum and Filter Tee	
	E14E211		Paper Separator Blower (Centre) not shown see B5-42	

* 313 Parts

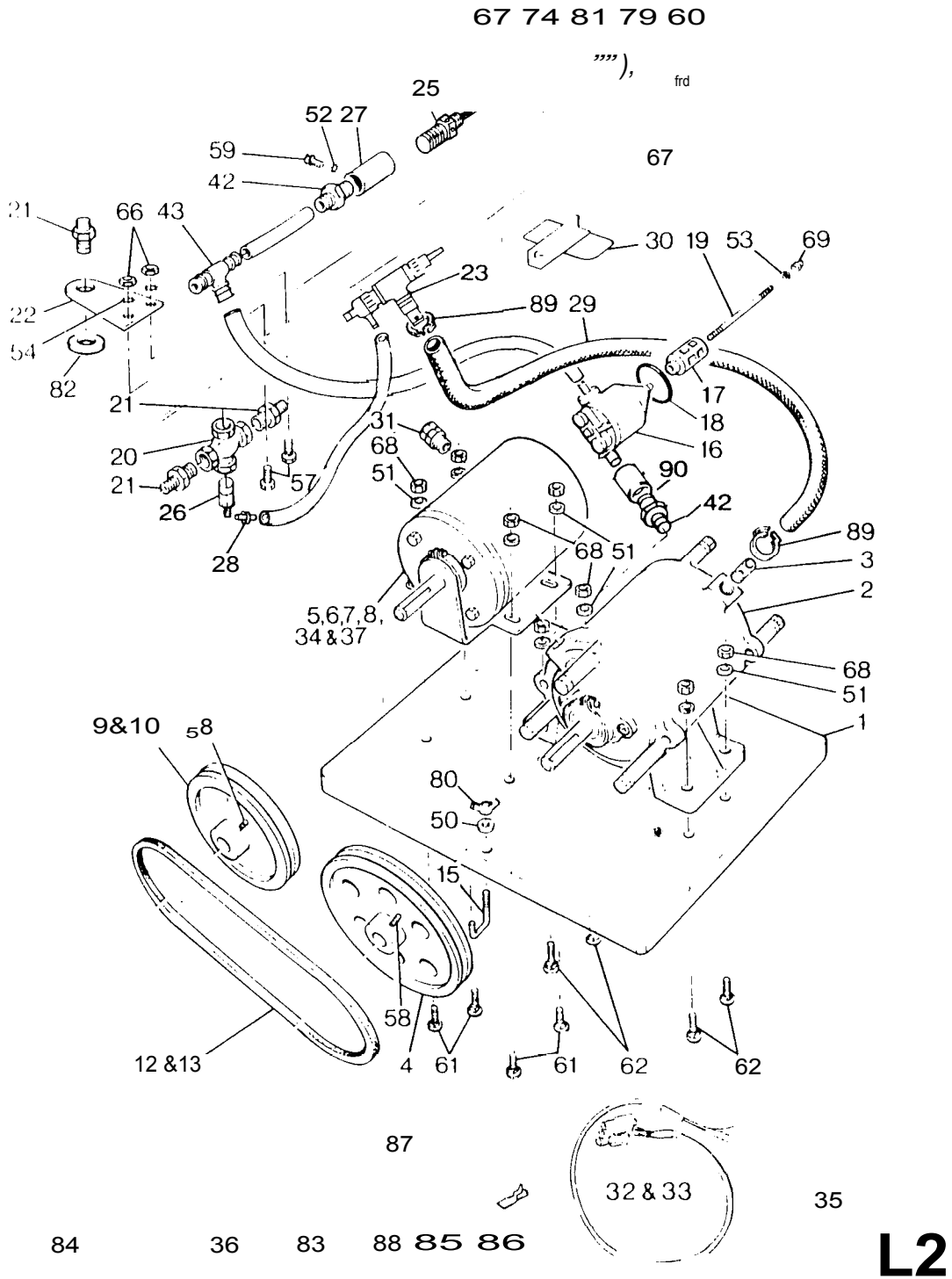

Index No.	Part No.		Equal to	Part	
50	LOOR003		0R3	Washer	
51	LOOR007	(25)	0R7	Washer	
52	L00R066	(25)	0R66	Lock Washer	
53	P147012	(10)	9141012Y99	Washer	
54	LOCR005	(25)	CR5	Lock Washer	
57	10H5175	(10)	H5175	Screw	1/4 in-28 UNF x 3/4 in
58	LOCS410	(10)	CS410	Screw	1/4 in-20 UNC x 3/8 in
59	L005033	(25)	0S33	Screw	1/4 in-20 UNC x 5/8 in
60	L005166	(25)	0S166	Screw	10-32 UNF x 1/4 in
61	100S257	(5)	05257	Bolt	M8 x M25
62	M14C001	(5)	222765173P	Bolt	M8 x M40
66	M14G006	(10)		Nut	1/4 in-28 UNF
67	LOOT006	(5)	076	Nut	5/8 in-18 UNF
68	LOHT006	(10)	0137,1416	Nut	M8
69	P147009	(10)	914701091'99	Nut	2 BA
74	100U093	(5)	0U93	Spring	
79	L0OW021	(2)	0W21	Knob	
80	LOOW055	(5)	0W55	Wing Nut	1/4-20 UNC
81	L004197	(5)	0W197	Collar	
82	L02J129	(5)		Spacer	
83	LOHW104	(10)	HW104	Tie for 36	
84	M14W016	(10)		Eyelet for 32,33 and 36	
85	M14W017	(10)		Terminal for 36	
86	M14W020	(10)		Tab for 36	
87	M13V006	(10)		Boot for 86	
88	10CW495	(25)	CW495	Boot for 85	
89	LOHW410	(5)	HW410	Clamp	

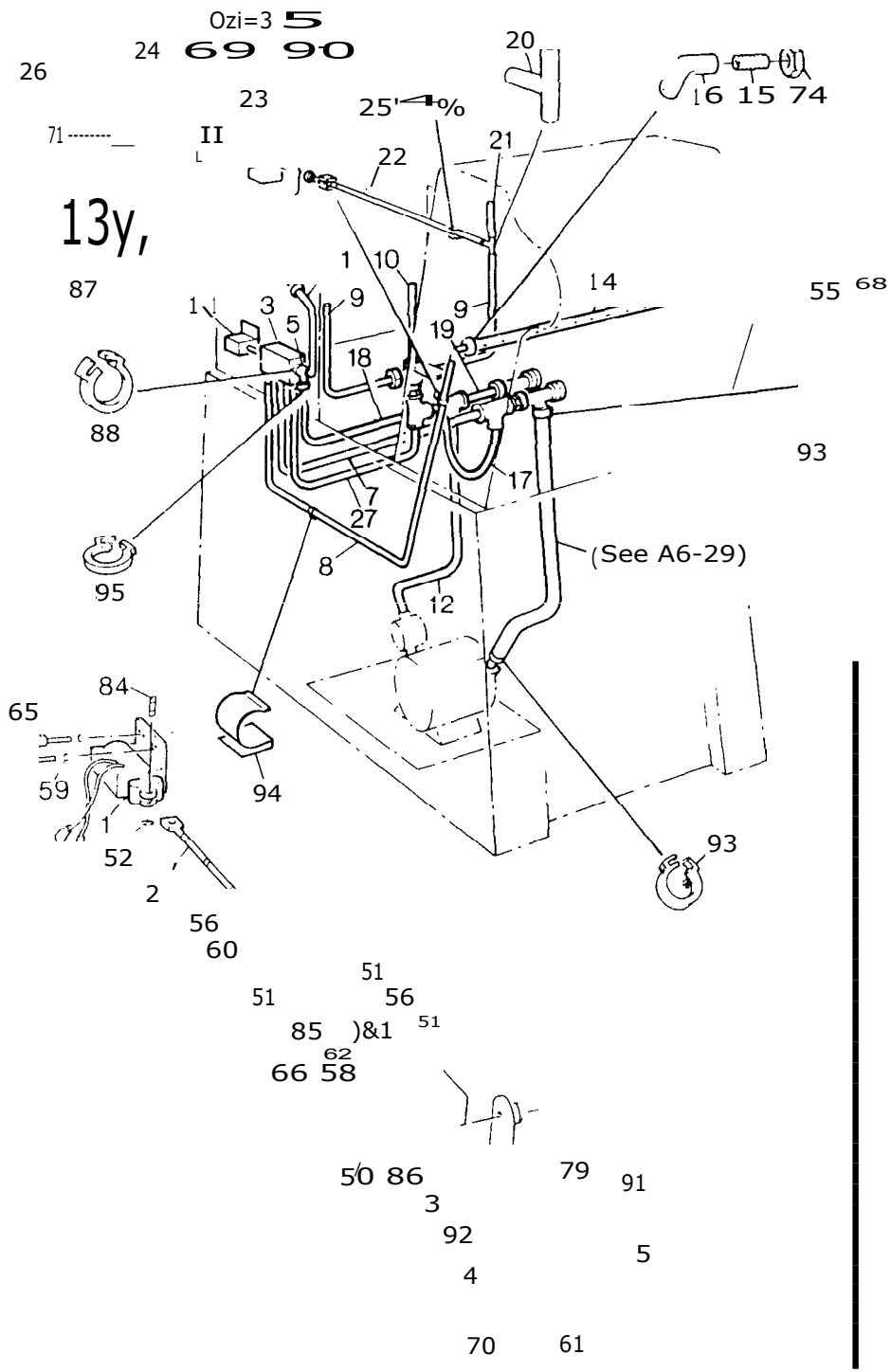

Index No.	Part No.	Equal to	Part	Serial No. 16D581
1	E14R218		Solenoid 22-29V	
2	E147021		Shaft	
3	E141019		Manifold	
4	E141015		Vacuum Shut-off Assembly	
5	E141063		3-way valve for Vacuum Pipe	
6	E141017		Bracket	
7	E141032		Air Pipe from 3t0 Pressure Filter Tee	
8	E141035		Air Pipe from 3 to 14	49 in
9	E141033		Left and Right Blower Pipe	16 in
10	E141034		Centre Blower Pipe	10 in
11	E141030		Vacuum Pipe for 5 and 13	13.1/4 in
12	E141047		Vacuum Pipe from filter to Vacuum Tee	14.1/2 in
13	F1411004	5611	Connecting Tube	
14	E141053		Spray Tube	
15	E141062		Connecting Tube	
16	E141023		Elbow	
17	E141045		By-pass Pipe	11 in
18	E141046		Pipe I"' Piece to 3-way Valve	13 in
19	E14T048		Pipe 1" Piece to Control Valve	9.1/2 in
20	F14C312		Tee Hose Connector	
21*	F14C310	4C-3	Left and Right Blower Tube	
22*	F14C305	3C-3	Hose for 26	
23*	F14C307	8C-3	Bracket for 26	
24*	F14C308	9C-3	Retaining Plate for 23	
25*	F14C306	7C-3	Retaining Clip for 22	
26*	F14C309	10C-3	Side Blower	
27*	E141069		Air Pipe from 3 to Air Coupling	26 in

* 313 Parts

50	LOOP002	(25)	OP2	Spring Clip
51	LOLP003	(25)	LP3	Spring Clip
52	LOCP009	(25)	CP9	Spring Clip
55	LOCR079	(10)	CR79	Lock Washer
56	LOOR014	(25)	OR14	Washer
57	100R003	(25)	OR3	Washer
58	M14A011	(25)		Lock Washer
59	LOOR067	(25)	OR67	Lock Washer
60	LOCR058	(25)	CR58	Washer (plastic)
61	LOOR066	(25)	OR66	Lock Washer
62	LOCR071	(10)	CR71	Washer
65	LOOS003	(10)	OS3	Screw 8-32 UNC x 3/8 in
66	M14F003	(10)		Screw 8-32 UNC x 1.1/4 in
67	LOOS036	(10)	OS36	Screw 1/4 in-20 UNC x 1 in
68	M14F002	(10)		Screw 3/8 in-16 UNC x 1.1/4 in
69	LOO5098	(10)	O598	Screw 8-32 UNC x 5/8 in
70	LOOS032	(25)	OS32	Screw 1/4 in-20 UNC x 1/2 in
71	LOO5009	(25)	OS9	Screw 10-32 UHF x 1/2 in
74	LOO1017	(10)	O117	Nut 3/8 in-16 UNC
79	L04A149	(10)		Spring
84	L035211	(5)		Peg
85	P141022	(5)		Piston
86	L02J131	(5)		Spacer
87	L01W072	(3)	OW72	Clamp
88	M14C002	(5)		Clamp
90	LOOW188	(10)	OW188	Clip
91	L03W081	(5)		spring Peg
92	LOHW145	(4)	MW145	Pad
93	LOHN410	(5)	HW410	Clamp
94	M14C004	(10)		Edge Clip
95	M14C003	(3)		Clamp

L3

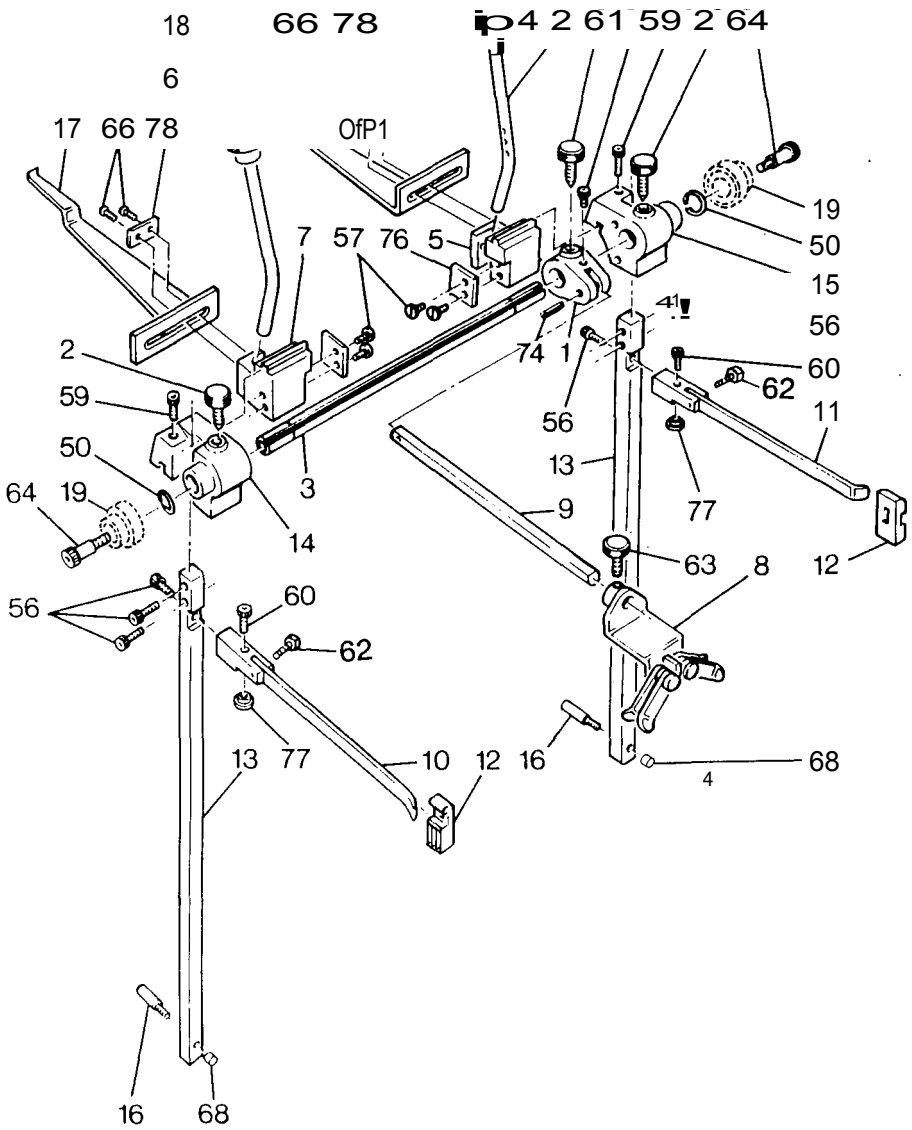

Index No.	Part No.	Equal to	Part		Serial
1	F14G091	1076	Swivel Bracket		
2	F146092	12443	Screw		
3*	F14G313	226-3	Lifting Shaft		
4	F14G094	122G	Blower - R.H.		
5	F14G095	1196	Bracket - R.H. - not for Magazine Feed		
6	F1443096	132G	Blower - L.H.		
7	F14G097	1286	Bracket - L.H. - not for Magazine Feed		
8	F146098	1336	Back Weight		
9*	F146314	23G-3	Shaft		
10	F14G100	2256	Side Arm - L.H. - complete with 60 and 77		
11	F146101	2266	Side Arm - R.H. - complete with 60 and 77		
12	F146102	30%	Side Fence		
13	E14F034		Feedboard Guide - L.H. and R.H.		
14	E14F053		Bracket - L.H. (not shown)		
15	E14F052		Bracket - R.H.		
16	E14F035		Support		
17*	E14E214		Feed Guide - L.H.		From 16E1.1
18*	E14E213		Feed Guide - R.H.		
19	See 87-9				

* 313 Parts

50	LOCP008	(25)	CP8	Spring Clip	
56	M146002	(25)	OS16	Screw	10-24 UDC x 5/8 in
57	M14J007	(10)		Screw	10-32 UNF x 7/16 in
59	L00S017	(25)	OS17	Screw	10-24 UDC x 3/4 in
60	L005024	(25)	OS24	Screw	6-32 UNC x 1/2 in
61	M1443007	(10)		Screw	8-32 UNC x 3 -
63	L005199	(5)	OS199	Screw	
64	L005255	(10)	OS255	Screw	
66	LOOS200	(5)	OS200	Screw	
68	LOOT010	(5)	07010	Nut	5/16 in-18 UNC
74	LOCW562	(10)	CW562	Spring Dowel	1/8 in dia. x 3/4 in
76	LO0w080	(5)	OW80	Spring Plate	
77	L00w082	(5)	OW82	Eccentric Nut	
78	L00w083	(10)	OW83	Plate	

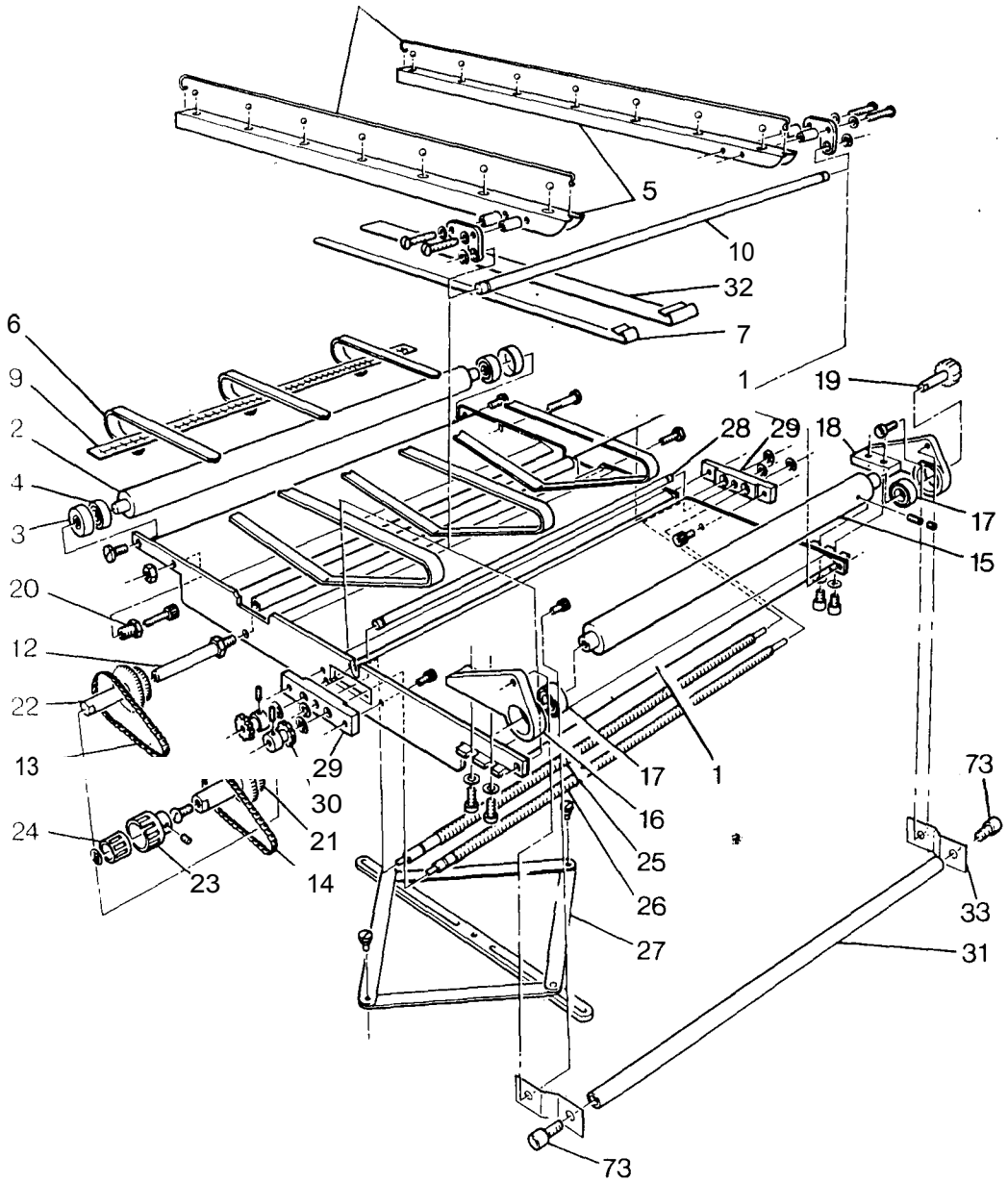

Index No.	Part No.	Equal to	Part		Serial
1*	E14V041		Platform		
2*	F14S301	2S-3	Front Roller		
3	F14S002	3S	Cover		
4	F145003	4S	Bearing		
5*	F14S302	3S-3	Ball Carrier		
6*	F14S303	4S-3	Belt (set of 3)		
7*	E14V083		Side Guide		From 14..
8*	F14S304	5S-3	Retainer		
9*	E05E299		Scale		
10*	F14S306	7S-3	Shaft		
11*	F14S307	8S-3	Tie Rod		
12	F14S010	23S	Adjusting Shaft		
13	F14S011	33S	Chain - 72 Links		
14	F14S012	34S	Chain - 61 Links		
15*	F14S308	10S-3	Back Roller		
16	F14S014	37$	Bearing Bracket - L.H.		
17	F145015	385	Bearing		
18	F14S016	39S	Bearing Bracket - R.H.		
19	F14S017	45S	Drive Gear		
20	F14S018	465,185V	Adjusting Nut		
21	F145019	49$	Gear/Sprocket Unit		
22	F14S020	50$	Gear/Sprocket Unit		
23	E14V019		Belt and Guide Adjusting Knob for L.H. side - complete with 64 on G1		
24	E14V028		Belt and Guide Adjusting Knob for R.H. side - complete with 64 and 79 on G1		
25*	F14S309	37-3	Adjusting Screw - L.H. side		
26*	F14S310	51-3	Adjusting Screw - R.H. side		
27*	F14S311	61-3	Scissor Bracket		
28*	F14S312	41-3	Shaft		
29	F145027	541	Bearing		
30	F14S028	521	Sprocket		
31*	E14V081		Support Bar		
32*	E14V082		Centre Guide)		From 16D6i
33*	E14V084		Bracket		
73*	LOOS009 (25)	0S9	Screw	10-32 UNF x 1/2 in	

* 313 Parts

PLEASE NOTE: FOR THE UNIT PACKS SEE G1

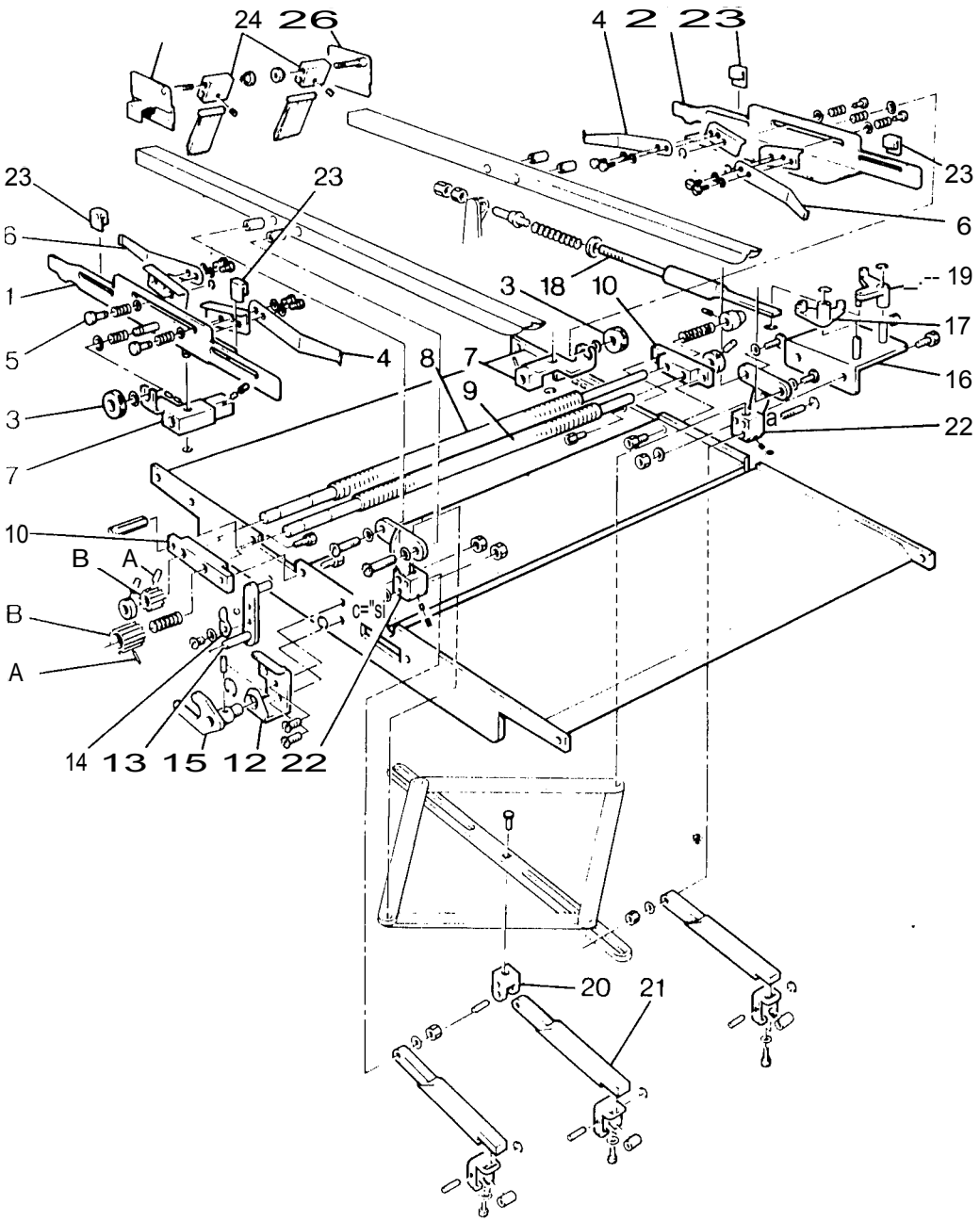

Index No.	Part No.	Equal to	Part	Serial
1*	E14V099		Jogger Side Guide - L.H.)	
2*	E14V098		Jogger Side Guide - R.H.)	From 16D
3	F147001	97	Adjusting Knob	
4*	E14V104		Feather	From 16D
5	E14V003	13T	Stud	
6*	F147105		Feather	From 160
7	F147028		Bracket	
8*	F147301	17-3	Adjusting Screw R.H. - complete with 7, A & B	
9*	F147302	27-3	Adjusting Screw L.H. - complete with 7, A & B	
10	F147008	237	Plate	
12	F147010	361	Bracket	
13	F147011	297	Lever	
14	F147012	337	Spring Plate	
15	F147013	357	Yoke	
16	F147014	48T	Plate	
17	E14V005	46T	Lever - R.H.	
18	F147015	40T	Push Rod	
19	E14V004	477	Lever - L.H.	
20	F147025	621	Adjusting Bracket	
21	F147026	661	Tension Weight	
22	F147027	737	Bracket - L.H. and R.H.	
23*	E14V085		Slide Block	
24*	E14V093		Pivot Block	
25*	E14V095		Bracket - L.H.)	From 16D
26*	E14V094		Bracket - R.H.)	

* 313 Parts

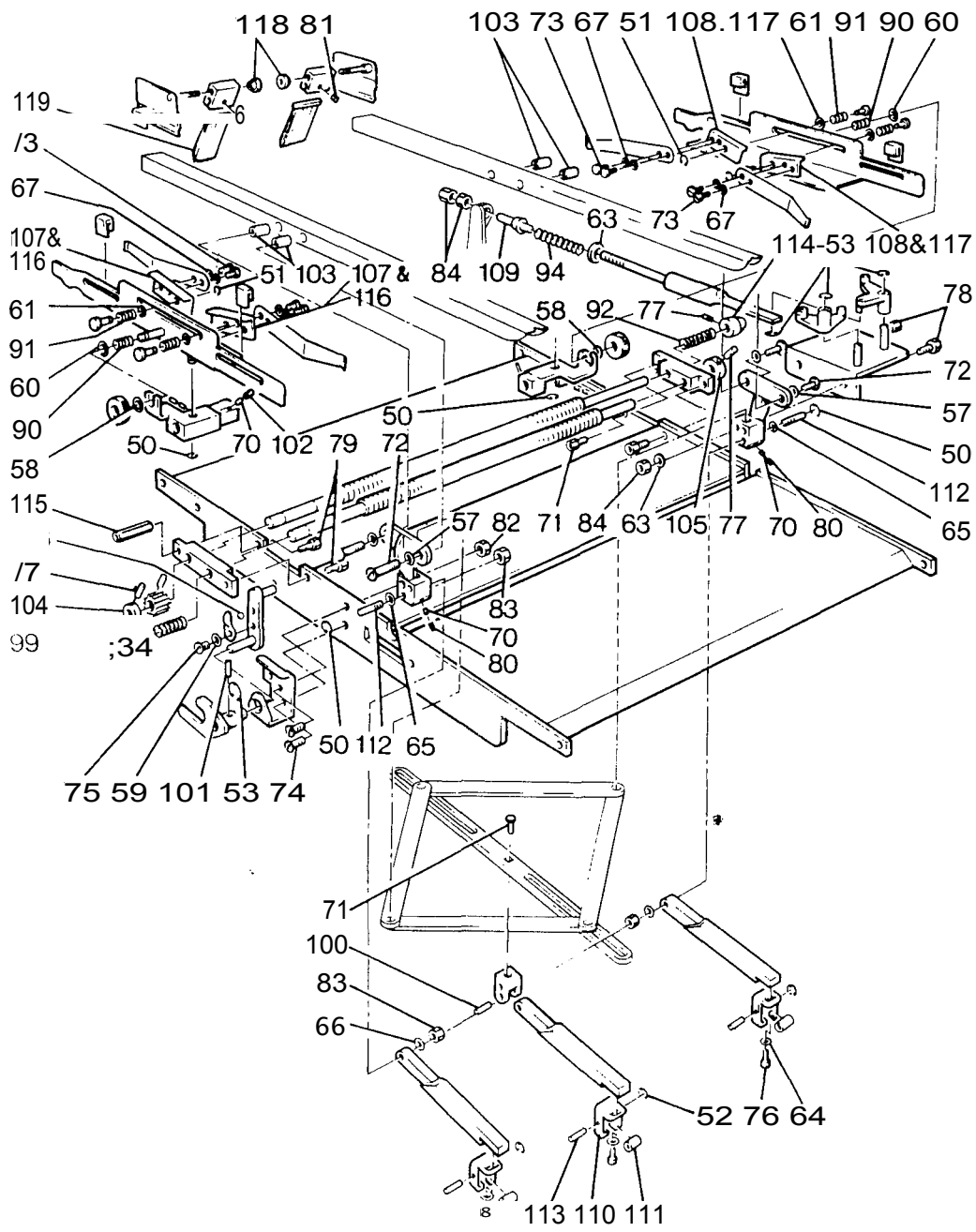

Index No.	Part No.		Equal to	Part		Serial
50	LOOP001		OP1	Spring Clip		
51	LOLP003	(25)	LP3	Spring Clip		
52	LOOP010	(25)	OP10	Spring Clip		
53	LOOP005	(25)	OP5,LP5	Spring Clip		
57	L00R022	(10)	OR22	Washer		
58	LOOR014	(25)	OR14	Washer		
59	L00R025	(10)	OR25	Washer		
60	L00R026	(10)	OR26	Washer		
61	LOOR031	(10)	OR31	Washer		
62	LOOR075	(10)	OR75	Shim Washer		
63	LOOR003	(25)	OR3	Washer		
64	LOCR153	(10)	CR156,OR21	Washer		
65	LOCR145	(25)	CR145	Lock Washer		
66	LOOR001	(25)	OR1	Washer		
67	M14V003	(10)	———	Shim Washer		
70	L0CS386	(10)	CS386	Screw	10-32 UNF x 1/8 in	
71	LOOS002	(25)	Os2	Screw - R.H.	8-32 UNC x 1/4 in	
72	LOOS100	(5)	OS100	Screw	10-32 UNF x 1.1/4 in	
73*	M147001	(10)		Screw	8-32 UNC x 3/32 in	
74	LOOS103	(10)	OS103	Screw	8-32 UNC x $^{3}/_{8}$ in	
75	LOOS104	(10)	OOO4	Screw	8-32 UNC x 3/16 in	
76	LOOS105	(10)	O5105	Screw	10-24 UNC x 3/8 in	
77	L005176	(10)	OS176	Screw	8-32 UNC x 1/8 in	
78	L00S064	(10)	OS64	Screw	1/4 in-28 UNF x 5/8 in	
79	LOOS004	(25)	OS4	Screw - L.H.	8-32 UNC x 1/2 in	
80	L00S169	(10)	OS169	Screw	113-32 UNF x 1/2 in	
81*	L00S177	(10)	OS177	Screw	8-32 UNC x 3/16 in	
82	M14M008	(10)		Nut	8-32 UNC	
83	L007032	(10)	O732	Nut	6-40 UNF	
84	M14G006	(10)		Nut	1/4 in - 28 UNF	
90	L0CU048	(10)	OU48	Spring		
91	LOOU049	(10)	OU49	Spring		
92	L0OU050	(3)	0(150	Spring		
93	LOOU051	(5)	0(151	Spring		
94	L0OU052	(3)	OO52	Spring		
100	L0OW045	(25)	OW45	Spring Dowel	5/32 in x 7/8 in	
101	L0CW033	(25)	OW33	Spring Dowel	3/32 in dia. x 3/4 in	
102	L00W085	(10)	OW85	Plug		
103	L0CW146	(20)	OW146	Spacer		
104	L00W148	(5)	OW148	Stop - L.H.		
105	L00W149	(5)	OW149	Collar		
106	L0OW150	(20)	OW150	Steel Ball		
107	P14V017	(3)		Bracket - old-style (Oyster)		
108	P14V018	(3)		Bracket - old-style (Blue Black)		
109	L004153	(5)	OW153	Sleeve		
110	100W154	(3)	OW154	Bracket		
111	L0OW155	(3)	OW155	Roller		
112	LOOW156	(5)	OW156	Spindle		
113	LOCW217	(5)	OW217	Spindle		
114	LOOW147	(5)	OW147	Cap - R.H.		
115	LO1J016	(5)		Nut	8-32 UNC x 5/8 in	
116*	m14V101	(3)		Bracket (Oyster)		
117+	M14V100	(3)		Bracket (Blue Black))		
118*	P14V088	(4)		Knob		From 16Do
119*	P14V089	(2)		Brush		

* 313 Parts

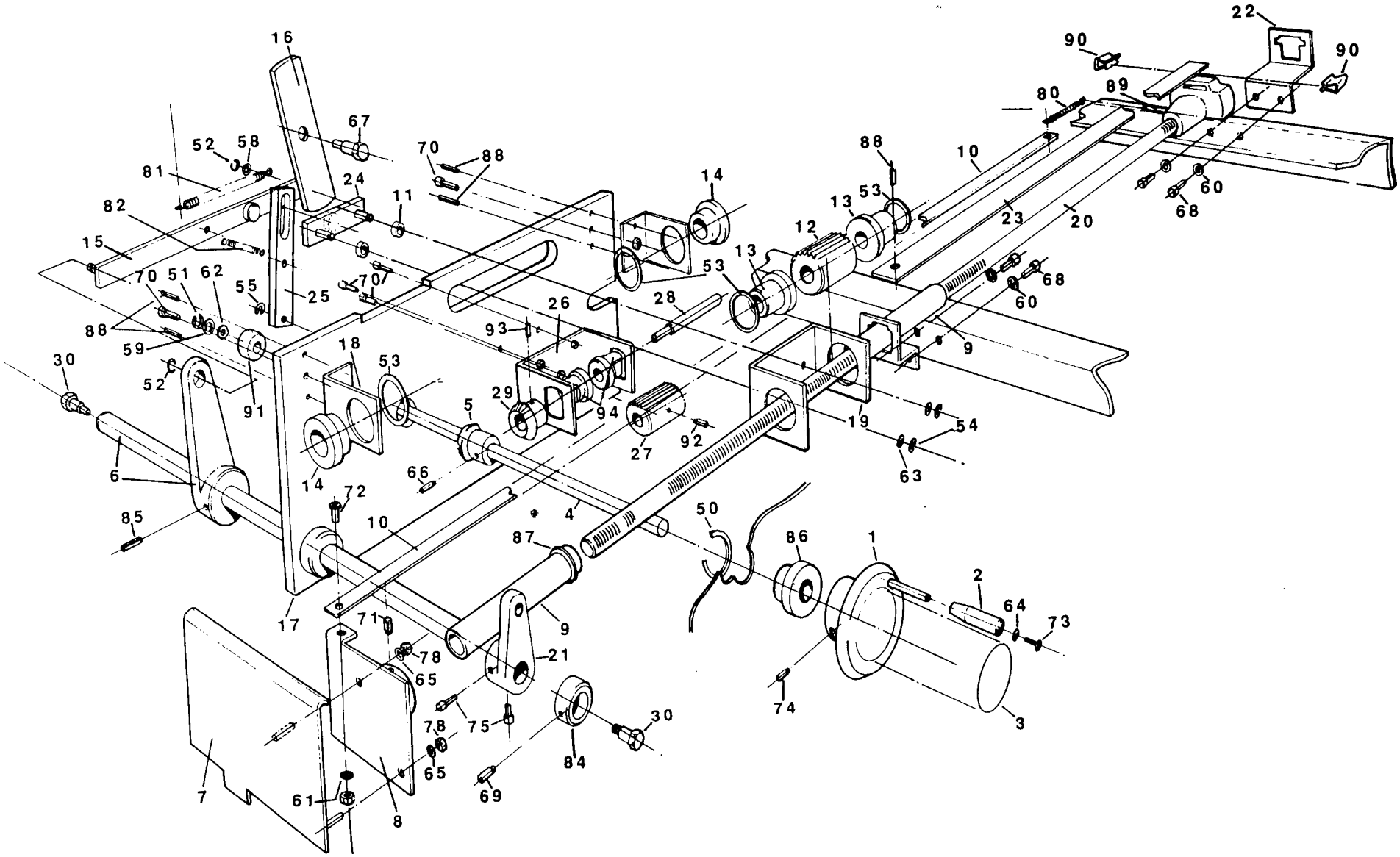
16
67
52
58
81
82
15
70
51
62
55
88
59
30
52
91
24
11
25
70
70
88
18
53
5
29
93
26
94
28
14
53
13
12
13
53
88
10
80
89
90
22
90
60
68
23
20
68
60
9
19
54
63
27
92
6
14
66
72
85
10
4
87
50
86
1
2
64
73
17
71
78
65
9
21
74
3
78
75
30
65
84
69
7
61
8

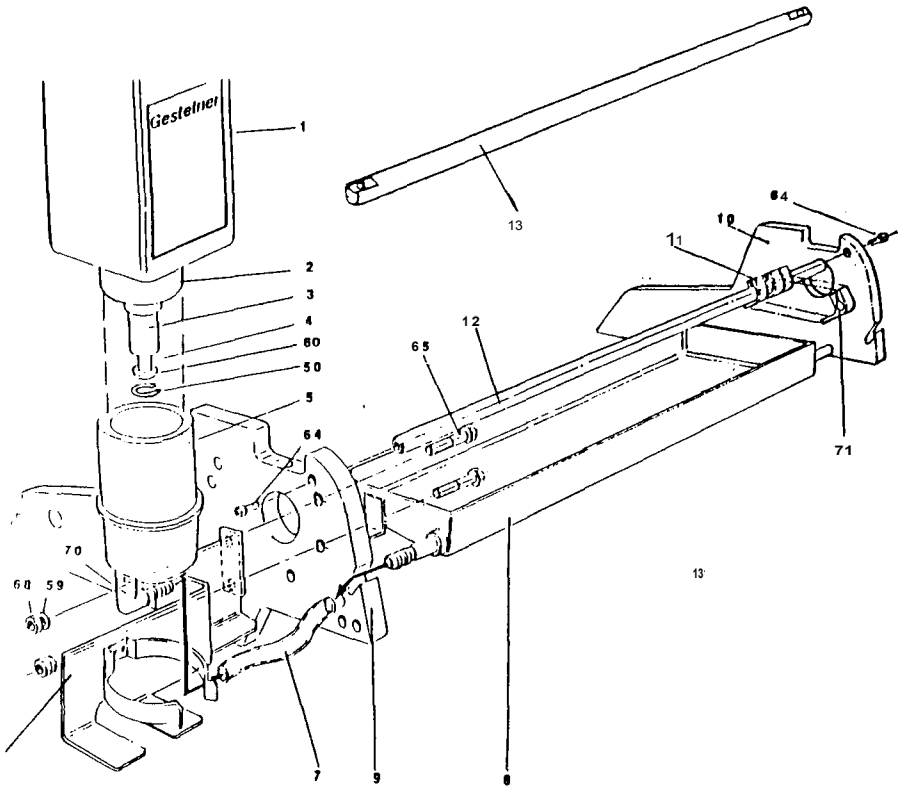

Index No	Part No	Equal to	Part	3	No.
	E14X168		Bottle Complete with 1,2,3,4,50 & 60		
1	E14X162		Bottle		
2	F14U050	187U	Cap		
3	F14U051	188U	Insert		
4	F14U052	182U	Valve		
5	El 4X160		Bottle Holder with 70		
6	E14X159		Bracket		
7	E14X161		liase		
8	E14X163		Trough		
9	E14X156		RH Side Frame		
10	E14X157		LH Side Frame		
	14N305		Printer Cover Upper RH see 313 Fiche index 2, A2		
12	El 4X173		Water Stop Shaft		
13	E14X171		Water Stop Shaft		
14	El 4X177		Water Stop Kit - Complete with 13, 71 and fitting instructions.		
50	LOOP019 (25)	0P19	Spring Clip		
59	LOOR020 (10)	0R20	Spring Washer		
60	L001R027 (10)	0R27	Washer		
64	LOOS017 (10)	0317	Screw 10-24 UNC x3/4 in long		
65	P14X167 (10)		Screw		
68	L001023 (10)	0123	Nut 10-32 UNF		
70	M14U015(4)		Connector		
71	P14X174 (10)		Water Slop		

ATTACHMENTS

INDEX

Chain Pile Delivery Unit	**AI, A2, A3**
Conveyor	**A4**
Delivery Tray Frame and Collecting Board	**A5**
Guards	**A5**
Side Plates and Base	**A6**
Drive Assembly	**A7**
Handwheel	**B1**
Light Unit	**B2**
Anti-Set-Off Spray	**C2, C3**
Automatic Ink Roller Cleaning	**C4**
4 Sucker System	**C5**
Blanket Cleaning Attachment	**EI, E2, E3, E4**
Manual Plate Loading Platform	**FI, F2**

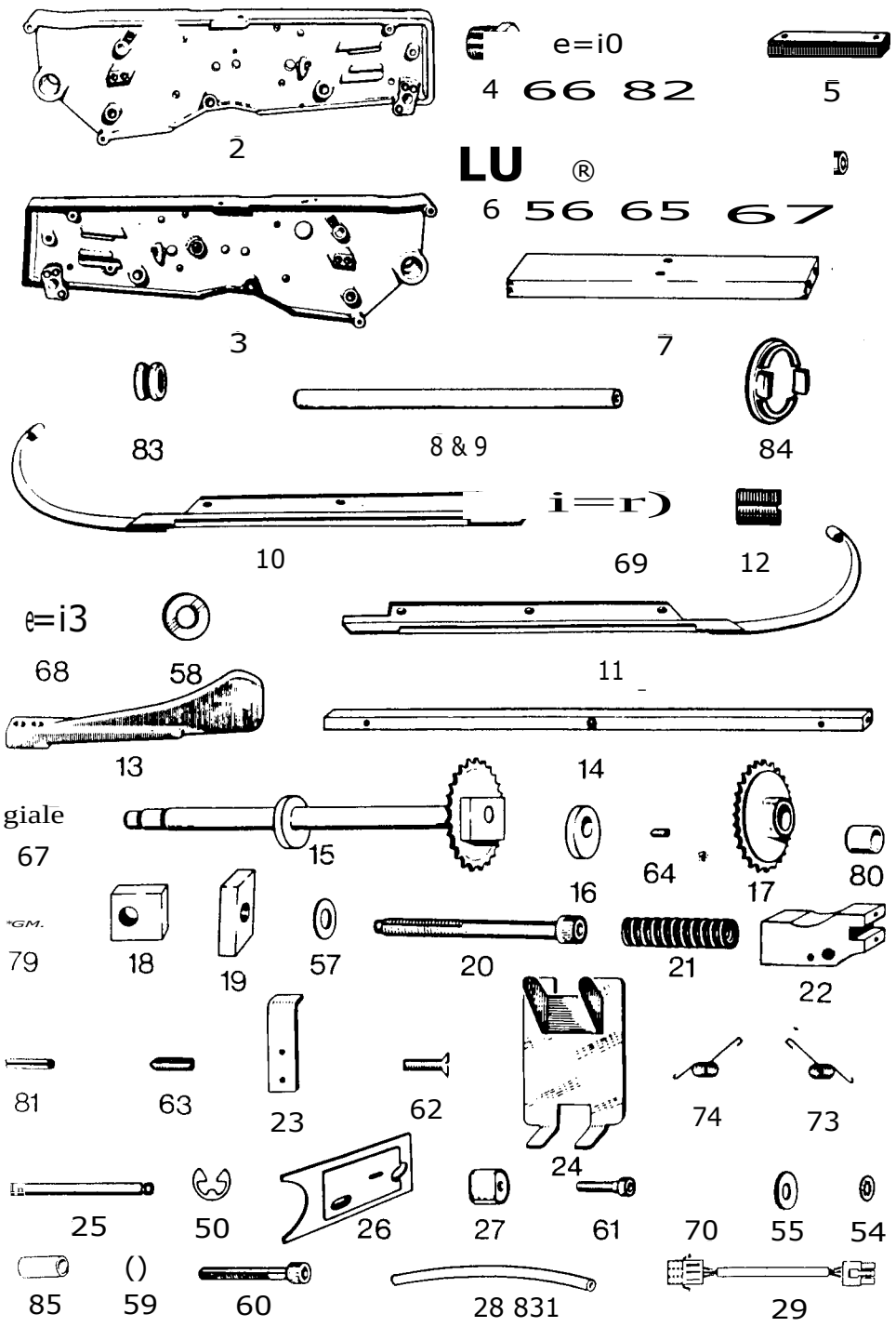

Index No.	Part No.	Equal to	Part
1	E10A441		Chain Pile Delivery Unit HV - complete (not shown)
2	E10A406		L.H. Side Frame
3	ElUA405		R.H. Side Frame
4	E10A259	504C-3	Adjusting Nut for 2 and 3
5	E10A110	107CP	Spacer for 2 and .3
6	E10A273	506C-3	Support Plug for 2 and 3
7	E10A175	509C-3	Front Tie Bar for 2 and 3
8	E10A150	512C-3	Back Tie Bar (Top) for 2 and 3
9	E10A148	513C-3	Back Tie Bar (Bottom) for 2 and 3
10	E10A372		Lower Chain Guard Rail Support - L.H. for 2
11	E10A371		Lower Chain Guard Rail Support - R.H. for 3
12	E10A104	170CP	Adjusting Screw for 10 and 11
13	E10A214	511C-3	Pick-up Cam
14	E10A266	105CP	Back Stop Tie Bar
15	E10A151	698C-3	Back Sprocket Shaft - complete with 16,17,18,64,79 and 80
16	E10A156	542C-3	Cam for 15
17	El0A153	106CP,537C-3	Sprocket - complete with 80
18	E10A155	539C-3	Adaptor for 15 (R.H. End)
19	E10A274	546C-3	Adjusting Nut for 20
20	F14P019	544C-3	Adjusting Screw for 18
21	F14P020	547C-3	Spring for 20
22	E10A215	696C-3	Back Stop Block
23	El0A002	697C-3	Back Stop Stripper for 22
24	E10A125	108CP	Back Stop Blade
25	E035197	109CP	Pivot Pin for 24
26	E10A373		Guard for 15
27	F14P031	627C-3	Spacer for 26
28	E10F055		Blanket Wash Tube
29	E14R235		Blanket Wash Harness
30	E10A442		Chain Pile Delivery Unit (LV and CSA) - complete (not shown)

Serial No,

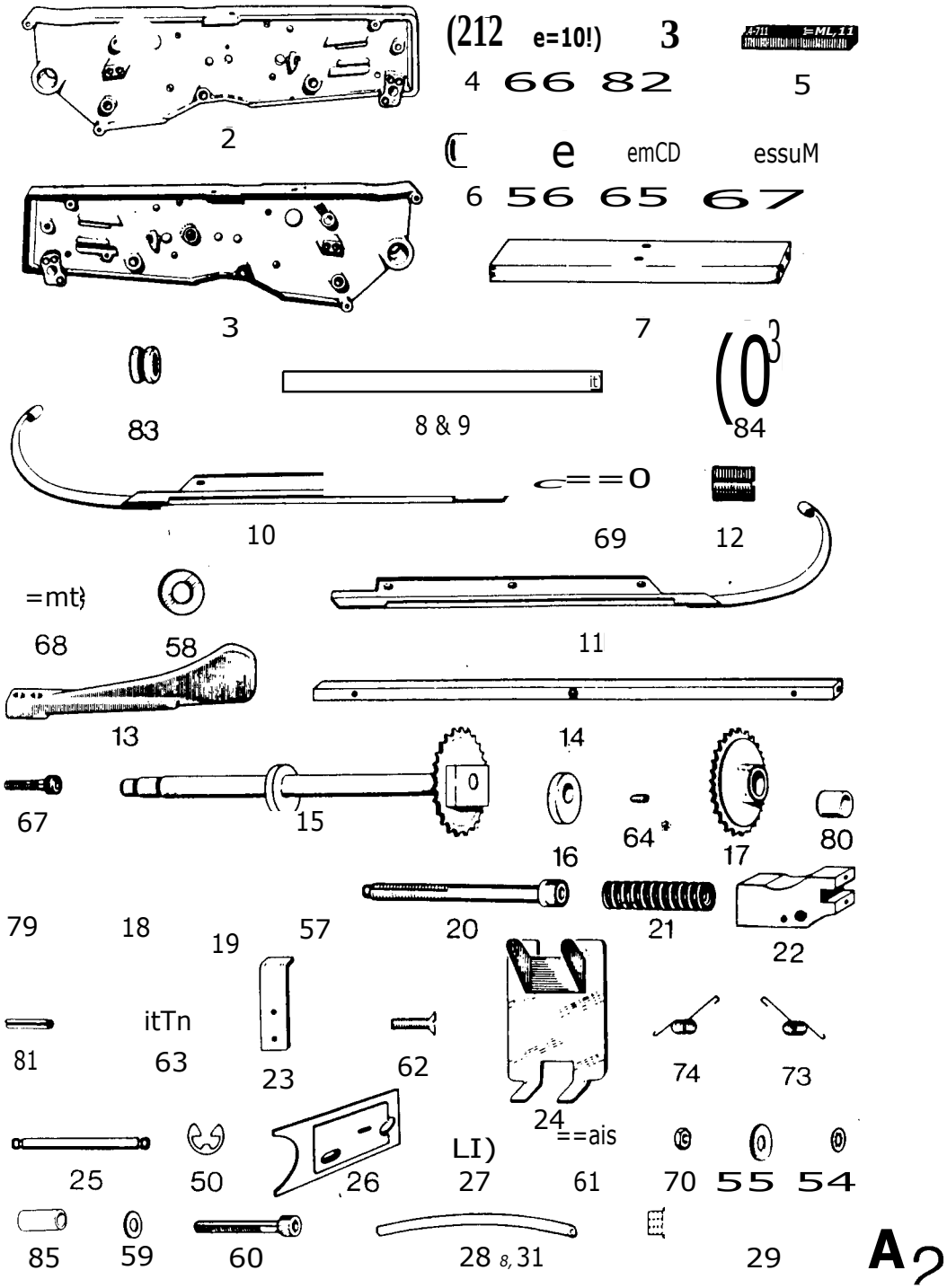

Index No.	Part No.	Equal to	Part	Serial No.
50	LOOP006 (25) 0P6		Spring Clip for 25	
54	LOCR110 (25) CR110,0R60		Lock Washer for 61	
55	P14A394 (10)		Washer for 70	
56	L0HR101 (10) HR101		Washer for 6	
57	L00R007 (25) 0R7		Washer for 20	
58	LOCR017 (25) CR17		Washer for 68	
59	L02A079 (10)		Washer for 60	
60	M14P013 (5)		Screw for 85 1/4 in-20 UNC x 2.1/4 in	
61	L00S038 (10) 0538		Screw for 26 1/4 in-20 UNC x 1.1/2 in	
62	LOHS150 (25) HS150		Screw for 23 4-40 UNC x 1/4 in	
63	LOHS151 (10) HS151		Screw for 22 5/16 in-18 UNC x 3/4 in	
64	L005390 (10) HS182,C-5590		Screw for 16 1/4 in-28 UNF x 1/4 in	
65	L005014 (25) 0S14		Screw for 56 10-24 UNC x 3/8 in	
66	L00S036 (10) 0S36		Screw for 4 1/4 in-20 UNC x and 5 1.1/4 in	
67	L005051 (10) 0S51		Screw for 7, 1/4 in-28 UNF x 7/8 in 8,9,13 and 14	
68	L005097 (25) 0S97		Screw for 10 10-24 UNC x 1/2 in and 11	
69	LOHS166 (10) H5166		Screw for 10 10-24 UNC x 3/4 in and 11	
70	LOOT008 (25) OT8		Nut for 61 1/4 in-20 UNC	
73	LOHU100 (4) HU100		Spring - L.H. for 24	
74	LOHU101 (4) HU101		Spring - R.H. for 24	
79	LOCW033 (25) HW30I,CW33		Spring Dowel 1/8 in x 1 in for 15	
80	LOHW303 (2) HW303		Bearing for 17	
81	LOCW035 (10) HW319,CW35		Spring Dowel 3/32 in x 3/8 in for 22	
82	L0HW323 (2) HW323		Bearing for 2 and 3	
83	LOHW315 (4) HW315		Grommet for 3	
84	PI0A374 (3)		Plug for 3	
85	PI0F092 (5)		Spacer for 3 when fitting Blanket Wash	

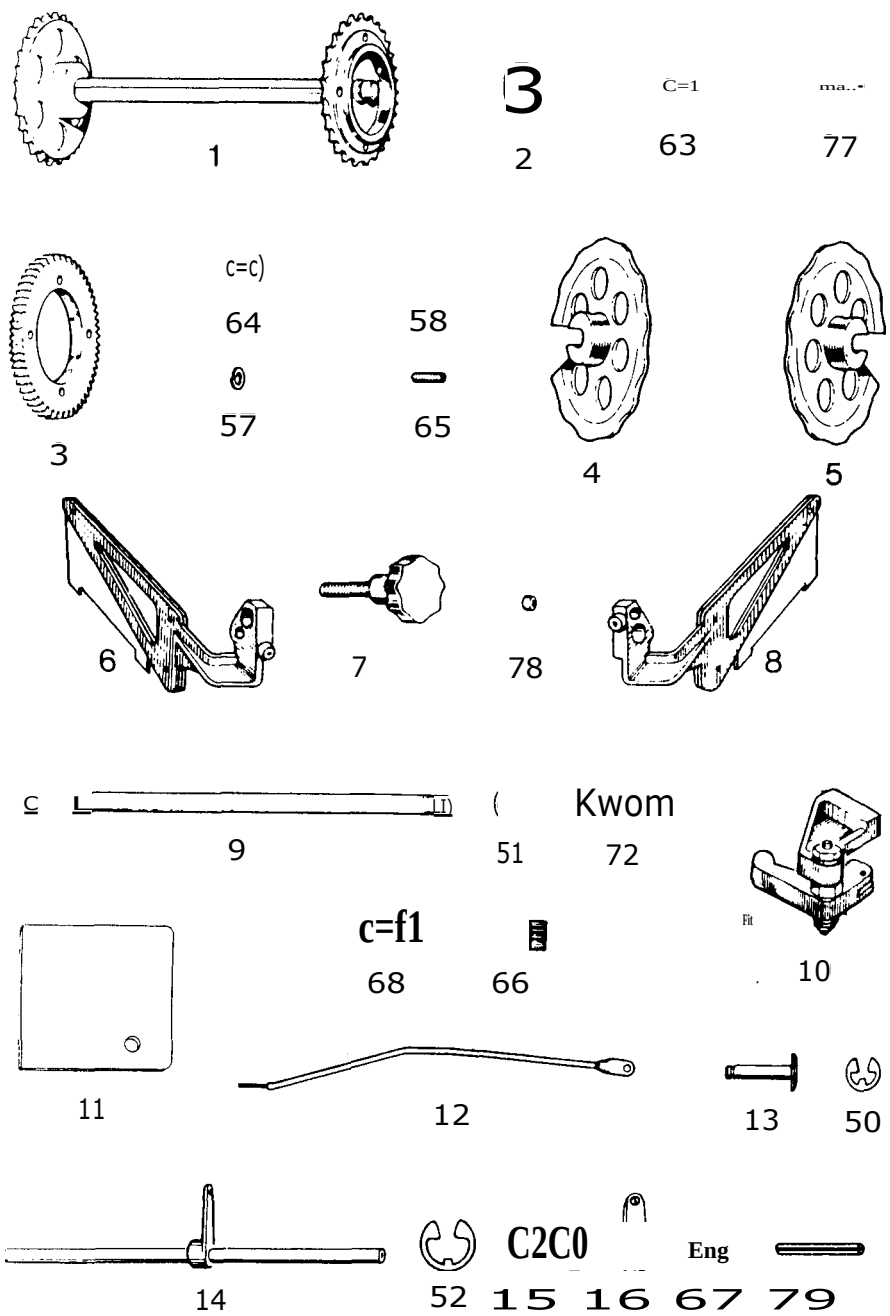

Index No.	Part No.	Equal to	Part		Serial No.
1	E10A157		Front Sprocket Shaft - complete		
2	F14P021	526C-3	Bearing for 1		
3	F14P042	527C-3	Drive Gear for 1		
4	E10A162	532C-3	L.H. Paper Guide Wheel		
5	E10A164	533C-3	R.H. Paper Guide Wheel		
6	E10A086	116CP	Jogger Side Guide - L.H.		
7	E10A208	117CP	Knob for 6 and 8		
8	E10A088	115CP	Jogger Side Guide - R.H.		
9	E10A221	699C-3	Jogger Shaft - R.H.		
10	F14P023	119CP	Jogger Bell Crank Assembly - complete with 11		
11	E10A419		Cover for 10		
12	E10A067	120CP	Connecting Link for 10		
13	F14P024	121CP --	Pin for 12		
14	E10A212	700C-3	Link Arm Shaft - complete		
15	E01E041	123CP	Pivot Screw for 14		
16	E10A091		Drive Link Arm for 14		
50	LOOP001 (25)	OP1	Spring Clip for 13		
51	LOOP002 (25)	OP2	Spring Clip for 9		
52	LOOP005 (25)	OP5	Spring Clip for 14		
57	LOCR134 (25)	HR103,CR134	Spring Washer for 64		
58	LOCR043 (25)	CR43,HR108	Washer for 64		
63	L0H5152 (10)	HS152	Set Screw for 1	10-24 UNC x 1/2 in	
64	LOHS153 (5)	HS153	Screw for 3	1/4 in-20 UNC x 1 in	
65	L0H5154 (10)	H5154	Set Screw for 4 and 5	1/4 in-20 UNC x 3/8 in	
66	LOHS183 (5)	HS183	Screw for 10	10-24 UNC x 1 in	
67	L0H5184 (10)	H5184	Screw for 16	1/4 in-28 UNF x 3/8 in	
68	MI4G002 (25)	0516	Screw for 10	10-24 UNC x 5/8 in	
72	LOHU107 (2)	HU107	Spring for 9		
77	LOHW302 (5)	HW302	Taper Pin for 1	0.187 in x 1.3/4 in	
78	L0HW322 (10)	HW322	Plug for 7		
79	L0HW010 (25)	HWIO	Spriol Pin for 14	5/32 in x 1 in	

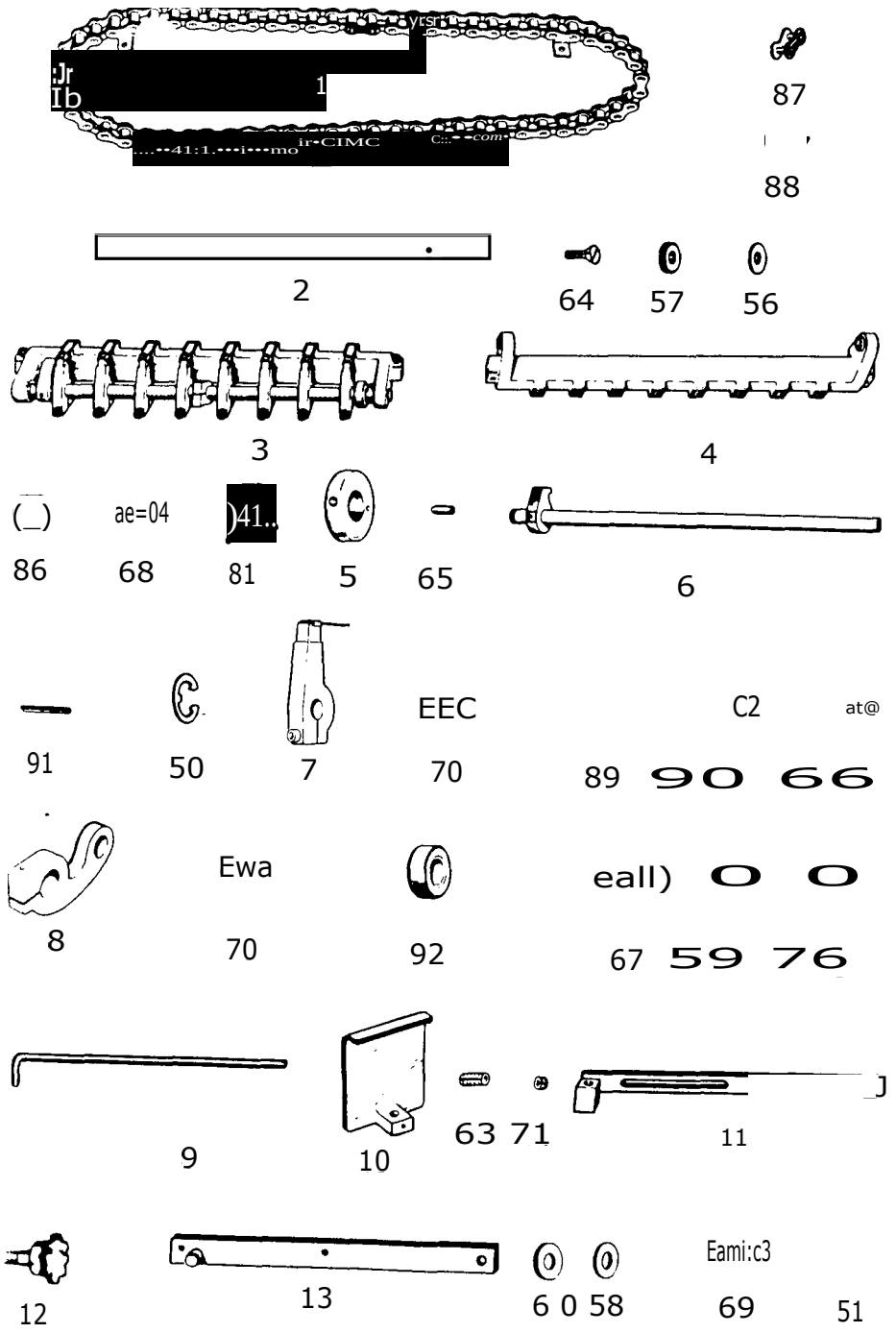

Index No.	Part No.	Equal to	Part	Serial No.
1	E10A323	548C-3	Conveyor Chain - complete with 87 and 88	
2	E10A298	551C-3	Chain Guide	
3	E10A166	555C-3	Gripper Bar Assembly	
4	E10A167	557C-3	Gripper Bar - complete with 86	
5	F14P025	567C-3	Adjusting Collar fOr 81	
6	F14P043	559C-3	Shaft Assembly for 4	
7	El0A031		Gripper - complete with 66,70,89 and 90	
8	E10A173	717C-3	Operating Lever	
9	E10A203	594C-3	Jogger Adjusting Shaft	
10	E10A113	129CP	Front Jogger Blade for 9	
11	E10A204	587C-3	Jogger Link Cross Bar for 9	
12	E10A207	593C-3	Locking Knob for 11	
13	E10A123	128CP	Back Jogger Link for 11	
50	LOOP003 (25)	0P3	Spring Clip for 6	
51	L00P005 (25)	0P5	Spring Clip for 13	
56	LOCR081 (25)	CR81	Spacer for 2 (R.H. Side)	
57	LOHR104 (10)	HR104	Spacer for 2 (L.H. Side)	
58	LOCR017 (25)	CR17,HR109	Washer for 69	
63	LOHS091 (5)	HS91,H5155	Screw for 10 1/4 in-20 UNC x 3/8 in	
64	LOHS156 (10)	H5156	Screw for 2 10-32 UNF x $^{5}/_{8}$ in	
65	LOHS157 (25)	H5157	Screw for 5 10-32 UNF x 3/16 in	
66	LOLS074 (10)	LS74	Screw for 89 M3 x 6mm long and 90	
67	L0H5159 (2)	H5159	Screw for 92	
68	LOHS176 (25)	H5176	Screw for 4 8-32 UNC x 1/2 in	
69	LOHS185 (25)	H5185	Screw for 13 10-32 UNF x $^{5}/_{16}$ in	
70	LOCS420 (10)	C5420	Screw for 7 8-32 UNC x 5/8 in and 8	
71	L005189 (10)	0S189	Lock Screw 1/4 in-20 UNC x 1/8 in for 63	
76	LOHT051 (10)	HT51	Nut for 67	
81	LOHU124 (10)	HU124	Spring for 4	
86	LOHW300 (2)	HW300	Bearing for 4	
87	LOHW304 (4)	HW304	Connecting Link for 1	
88	LOHW305 (4)	HW305	Support Link for 1	
89	LOHW306 (10)	HW306	Gripper Spring for 7	
90	LOHW307 (10)	HW307	Clamp for 89	
91	LOHW308 (10)	HW308	Spring Dowel for 6	
92	LOHW309 (2)	HW309	Roller for 8	

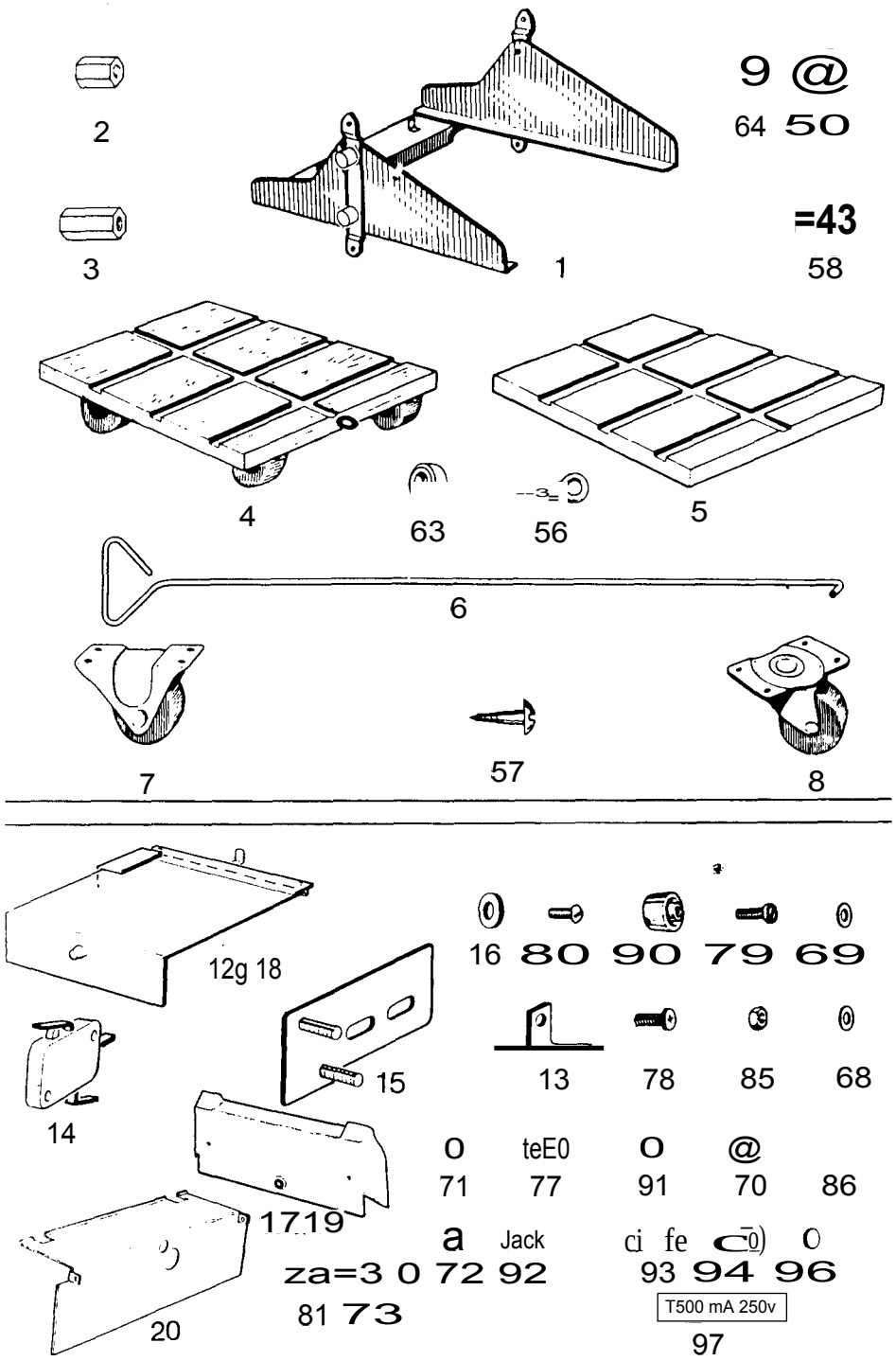

Index No.	Part No.	Equal to	Part	Serial No.
1	E10A369		Delivery Tray Frame	
2	E01J015	134CP	Stop for 1 (Top) - L.H.	
3	E013014	135CP	Stop for 1 (Top) - R.H.	
4	E10A216	702C-3	Collecting Board - complete	
5	E10A217	703C-3	Collecting Board for 4	
6	E10A082	132CP	Pull Rod for 4	
7	F14P027		Fixed Castor for 5	
8	F14P028		Swivel Castor for 5	
50	LOOR003 (25)	0R3	Washer for 58	
56	LOHS160 (5)	HS160	Screw Eye for 5	
57	LOHS186 (5)	HS186	Wood Screw for 7 and 8	No.12 x 5/8 in
58	L00S033 (25)	0S33	Screw for 2 and 3	1/4 in-20 UNC x 5/8 in
63	LOHW320 (2)	HW320	Roller for 1	
			GUARDS	
12	E10A414		Top Guard - complete with 13,68,69, 78,79,85 and 90	
13	E10A397		Bracket for 12	
14	F14A008		Microswitch for 12	
15	E14R182		Bracket for 14	
16	F14G032	275G	Collar for 12 and 80	
17	E14N099		Back Guard	
68	LOCR098 (10)	CR98	Washer for 85	
69	LOCR017 (25)	CR17,HR109	Washer for 79	
70	LOLR008 (25)	LR8	Washer for 86	
71	LOCR066 (25)	CR66	Washer for 77	
72	LOHW122 (4)	HW122	Washer for 93	
77	LOHS173 (10)	H5173	Screw for 15	10-32 UNF x 3/8 in
78	M14P012 (10)		Screw for 13	10-32 UNF x 3/8 in
79	L005058 (25)	C558	Screw for 90	2 BA x 7/16 in
80	LOHS178 (10)	HS178,C5334	Screw for 12	10-32 UNF x 1/2 in
85	LODT003 (25)	DT3	Nut for 78	10-32 UNF
86	LOCT072 (10)	C172	Nut for 15	4-40 UNC
90	L0CW384 (4)	CW384	Knob for 12	
91	L02A085 (10)		Spacer for 14 and 15	
92	LOHU004 (4)	HU4	Spring for 93	
93	M14A004 (4)		Lock Stud for 17	
94	LOHW117 (4)	HW117	Lock Cap for 93	
95	L05E279 (10)		Label for 17 (old-style not shown)	
96	L05E417 (10)		Label for 17	

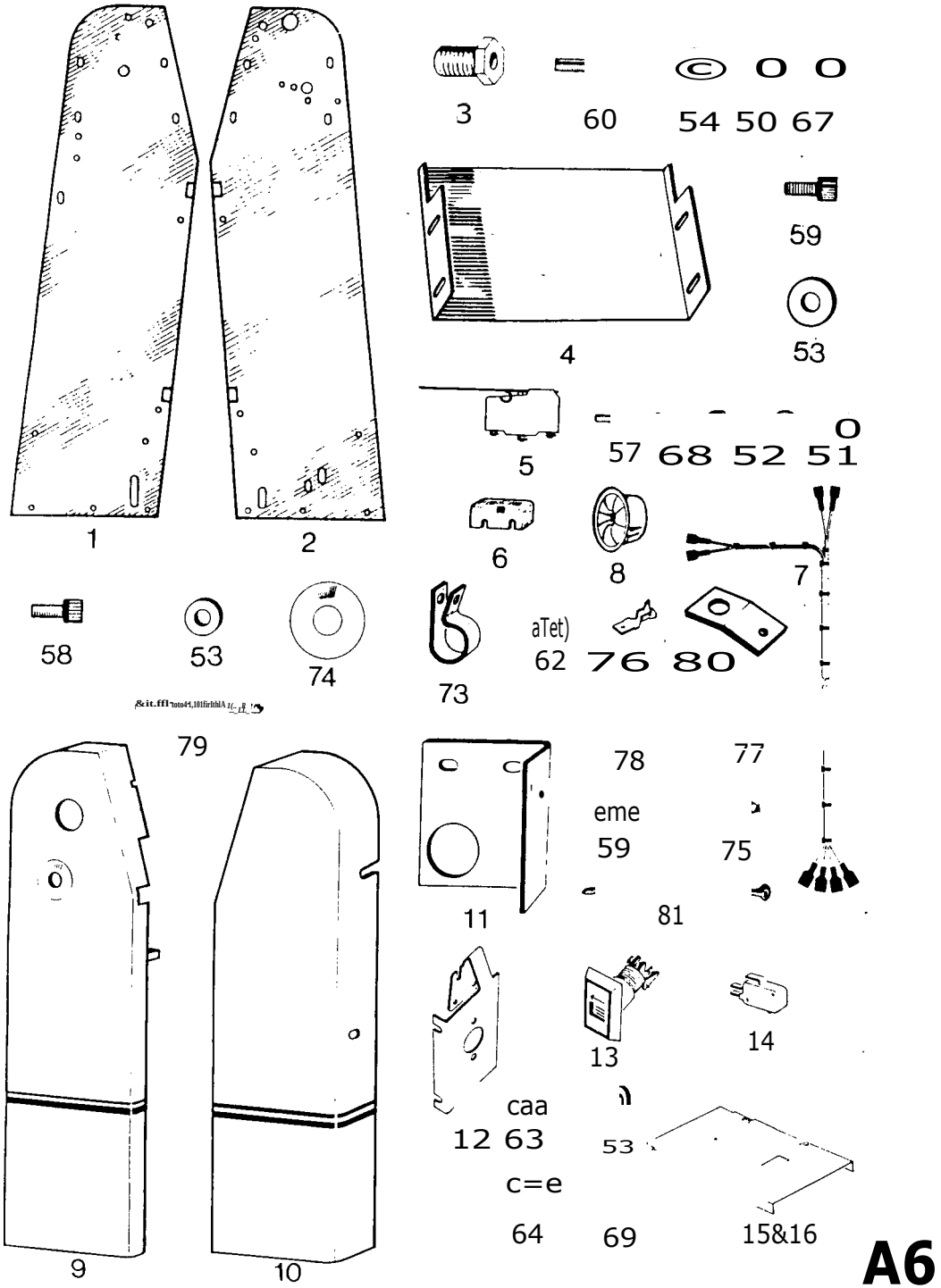

A6

Index No.	Part No.	Equal to	Part	Serial No.
1	E10A346		Side Plate - L.H.	
2	E10A365		Side Plate - R.H.	
3	E10A105	139CP	Adjusting Nut for 1 and 2	
4	El0A367		Base for 1 and 2	
5	E14R263		Cut-Off Microswitch	
6	F14P029	708C-3,511C-S 3660,5058	Cover for 5	
7	E14R232		Harness - L.H. for 5 and E14R218	
8	F14P030	710C-3	Bush for 7	
9	E10A348		Cover - L.H. for 1	
10	E10A363		Cover - R.H. for 2	
11	E10A101	142CP	Bracket for 5	
12	E14L020		Bracket for 2,13 and E14R218	
13	F143006		Push Button for 12	
14	F14.1007		Feed On-Off Microswitch for 13	
15	E14N182		Rear Cover for 313 Base (Collecting End)	
50	LOCR005 (25)	HR105,CR5	Washer for 60	
51	LOCR007 (25)	HR106,CR7	Lock Washer for 68	
52	LOOR015 (10)	0R15	Washer for 68	
53	LOCR153 (10)	CR153,0R21	Washer for 58,59 and 63	
57	LOHS162 (10)	HS162	Screw for 5 6-32 UNC x 1.1/4 in	
58	L005009 (25)	059	Screw for 9 and 10 10-32 UNF x 1/2 in	
59	LOOS014 (25)	0S14	Screw for 4 10-24 UNC x 3/8 in	
60	L005038 (10)	0538	Screw for 1, 2 and 3 1/4 in-20 UNC x 1.1/2 in	
62	L00S099 (25)	0S99	Screw for 73 10-24 UNC x 1/4 in	
63	M143007 (10)		Screw for 12 10-32 UNF x 7/16 in	
64	L0H5231 (10)	H5231	Screw for 15 M4 x 16mm	
67	LOOT008 (25)	0T8	Nut for 60 1/4 in - 20 UNC	
68	LOOT030 (10)	0T30	Nut for 57 6-32 UNC	
73	L00W188 (10)	OW188	Clip for 7	
74	L05E303 (10)		Label for 9	
75	M14W017 (10)		Terminal for 7	
76	M14W020 (10)		Tab for 7	
77	M13V006 (10)		Insulating Boot for 7	
78	L0CW495 (25)	CW495	Insulating Boot for 7	
79	P10A262 (5)		Grommet for 10	
80	LOHWO93 (10)	HW93	Retainer for 7	
81	LOCW805 (10)	CW805	Tie for 7	

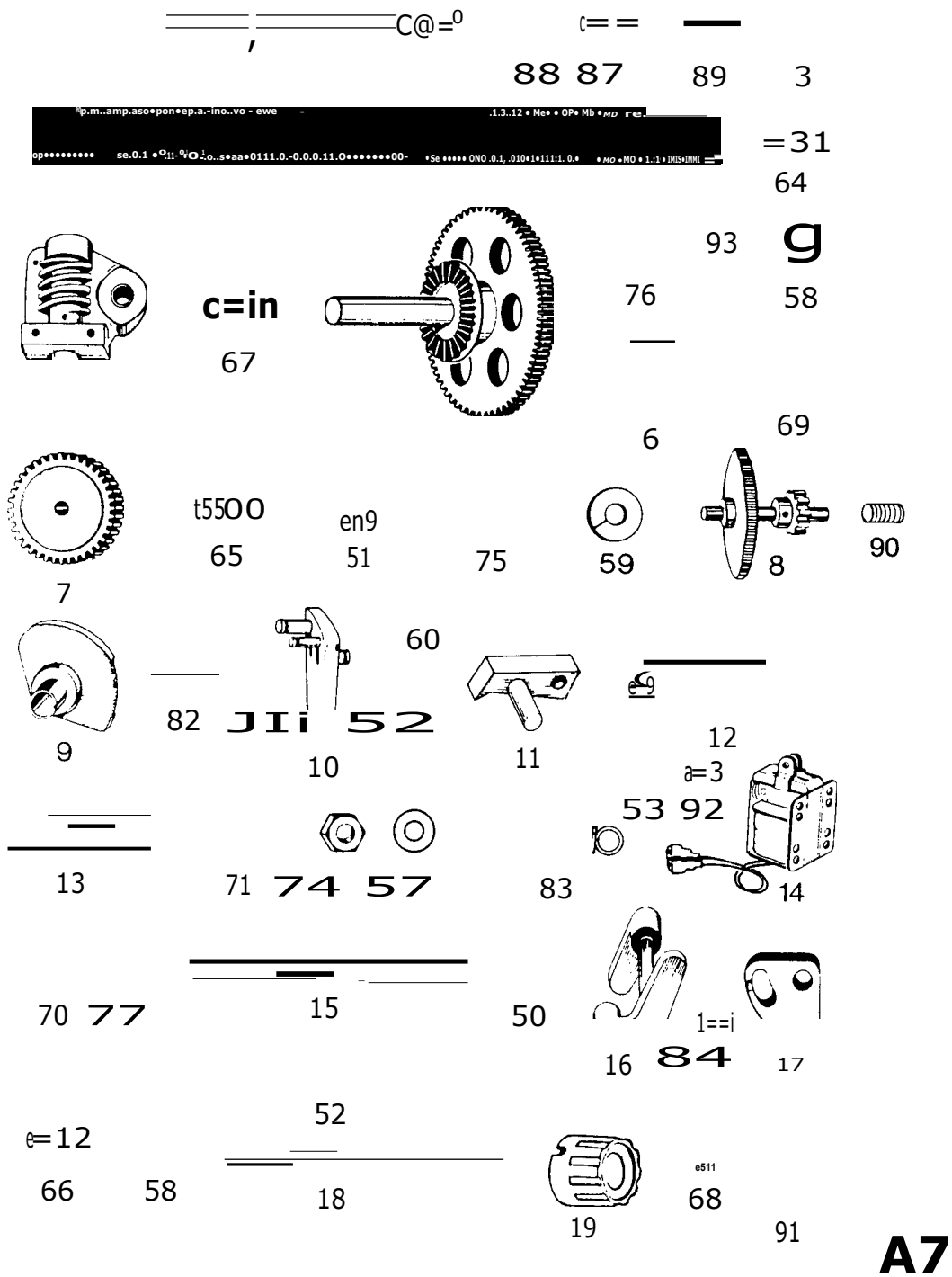

Index No.	Part No.	Equal to	Part	Serial No.
1	E10A199	711C-3	Drive Shaft Assembly	
2	E10A318	712C-3	Chain for 1	
3	F14G058	144CP,70G	Roller for 2	
4	E10A081	145CP	Worm Drive Assembly	
5	E10A064	146CP	Hand Drive Gear Shaft Assembly for 4	
6	E10A116	I47CP	Collar for 5	
7	E10A059	148CP	Intermediate Gear for 5	
8	E10A077	I49CP	Ratchet Shaft Assembly	
9	E10A085	154CP	Pile Drop Control Cam for 8	
10	E10A119	150CP	Ratchet Pawl Arm for 8	
11	E10A131	151CP	Pawl for 10	
12	E10A403		Link for 11	
13	E10A402		Link Extension for 12 and 14	
14	E14R196		-- Feed Shut-off Solenoid	
15	E10A103	158CP	Link for 10 and 16	
16	E10A074	155CP	Drive Link	
17	E10A095	156CP	Link Arm Extension for 16	
18	E10A120	157CP	Link for 16	
19	E10A313		Pile Drop Control Knob	
50	LOCP005 (25)	CP5,HP6	Spring Clip for 15	
51	LOOP003 (25)	0P3	Spring Clip for 65	
52	LOOP006 (25)	0P6	Spring Clip for 10 and 18	
53	LOCP009 (25)	CP9	Spring Clip for 92	
57	LOCR153 (10)	CR153	Washer for 74	
58	LOOR003 (25)	0R3	Washer for 10,76 and 66	
59	LOOR080 (10)	0R80	Spring Washer for 75	
64	LOHS163 (2)	HS163	Stud for 3	
65	LOHS164 (2)	H5164	Stud for 7	
66	LOHS165 (10)	H5165	Screw for 17 1/4 in-28 UNF x 5/8 in	
67	L005033 (25)	0533	Screw for 4 1/4 in-20 UNC x 5/8 in	
68	L005162 (25)	05162	Screw for 19 1/4 in-28 UNF x 3/8 in	
69	L005170 (10)	05170	Screw for 6 1/4 in-20 UNC x 1/4 in	
70	LOCS419 (25)	CS419	Screw for 14 6-32 UNC x 1/4 in	
71	PIOA404 (5)		Screw for 12 and 13	
74	L001023 (10)	0123	Nut for 71 10-32 UNF	
75	LOHT054 (10)	HT54	Nut for 65 5/16 in - 18 UNC	
76	LOHT055 (10)	HT55	Nut for 64	
77	M14R002 (25)		Nut for 70 6-32 UNC	
82	LOHU106 (5)	HU106	Spring for 10 and 15	
83	L04A032 (10)	CU27	Spring for 12 and 71	
87	LOHWO10 (10)	HW10	Spring Dowel 5/32 in x 1 in for 1	
88	LOHW310 (2)	HW310	Spacer for 1	
89	L00W044 (25)	0W44	Spring Dowel 5/32 in x 3/4 in for 1	
90	LOHW011 (25)	HWII	Spirol Pin 1/8 in x 5/8 in for 8	
91	L05E329 (5)		Label for 19	
92	L035211 (5)		Peg for 13 and 14	

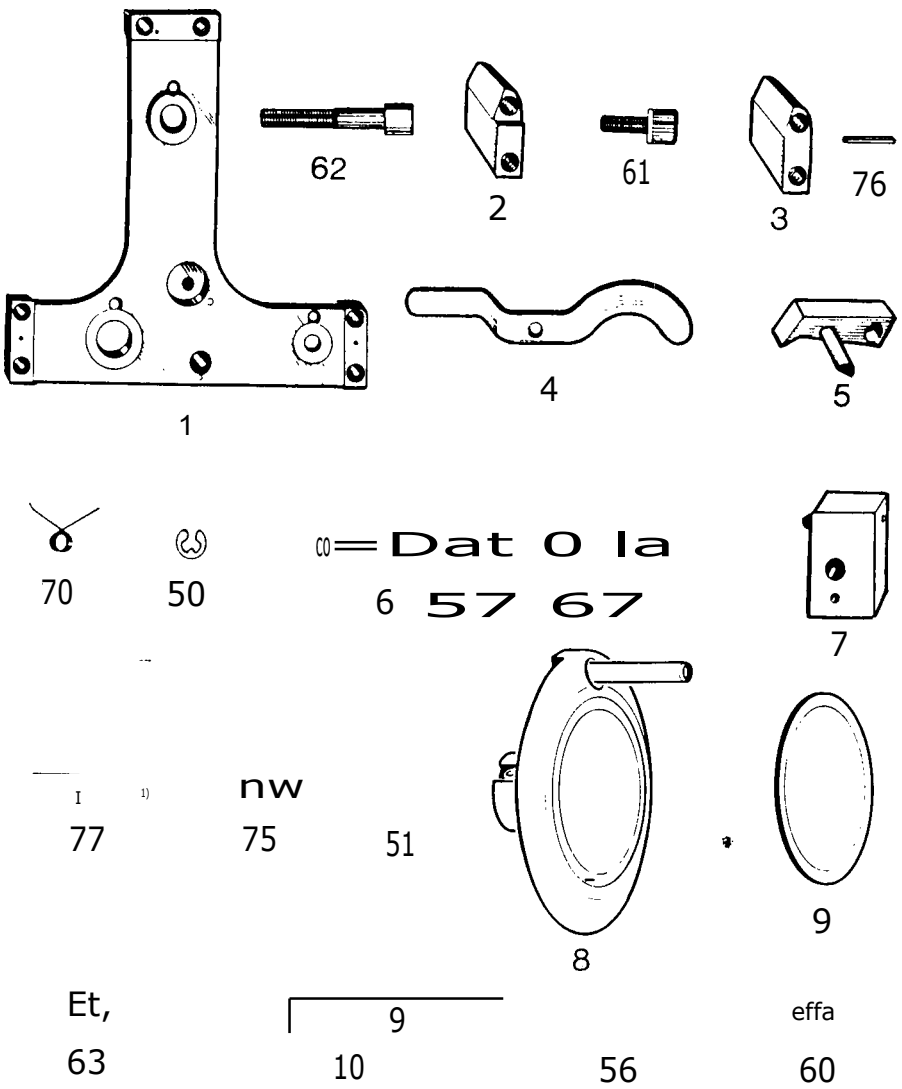

Index No.	Part No.	Equal to	Part
1	E10A083	160CP	Support Plate
2	E10A093	161CP	Plate Block (bottom) - L.H. for 1
3	E10A092	162CP	Plate Block (bottom) R.H. for 1
4	E10A370		Cut-out Lever for 2
5	E10A132	164CP	Ratchet Pawl Lock
6	E10A100	165CP	Stud for 5
7	E10A070	166CP	Rate Control Pin Block - complete with 51,75 and 77
8	E10A396		Handwheel with 9 and 63
9	E05E302		Label for 8
10	E14L023		Handle for 8
50	LOOP006 (25)	0P6	Spring Clip for 5 and 70
51	M14P006 (5)		Spring Clip for 77
56	P14L024 (10)		Cap Washer for 60
57	LOCR110 (25)	CR110,0R60	Lock Washer for 67
60	MI4G001 (10)		Screw for 10 10-32 UNF x 1/2 in
61	L005033 (25)	0S33	Screw for 1,2 and 3
62	L005038 (10)	0S38	Screw for 1 1/4 in-20 UNC x 1.1/2 in
63	M14P015 (10)		Screw for 8 3/8 in-16 UNC x 1/2 in
67	LOOT008 (25)	018	Nut for 6 and 62 1/4 in-20 UNC
70	LOHU102 (5)	HU102	Spring for 5
75	L00U0514 (10)	0U54	Spring for 77
76	LOCW024 (25)	HW311,CW24	Spring Dowel for 1 1/8 in x 5/8 in
77	L00W162 (5)	0W162	Plunger for 7

Serial No

R1

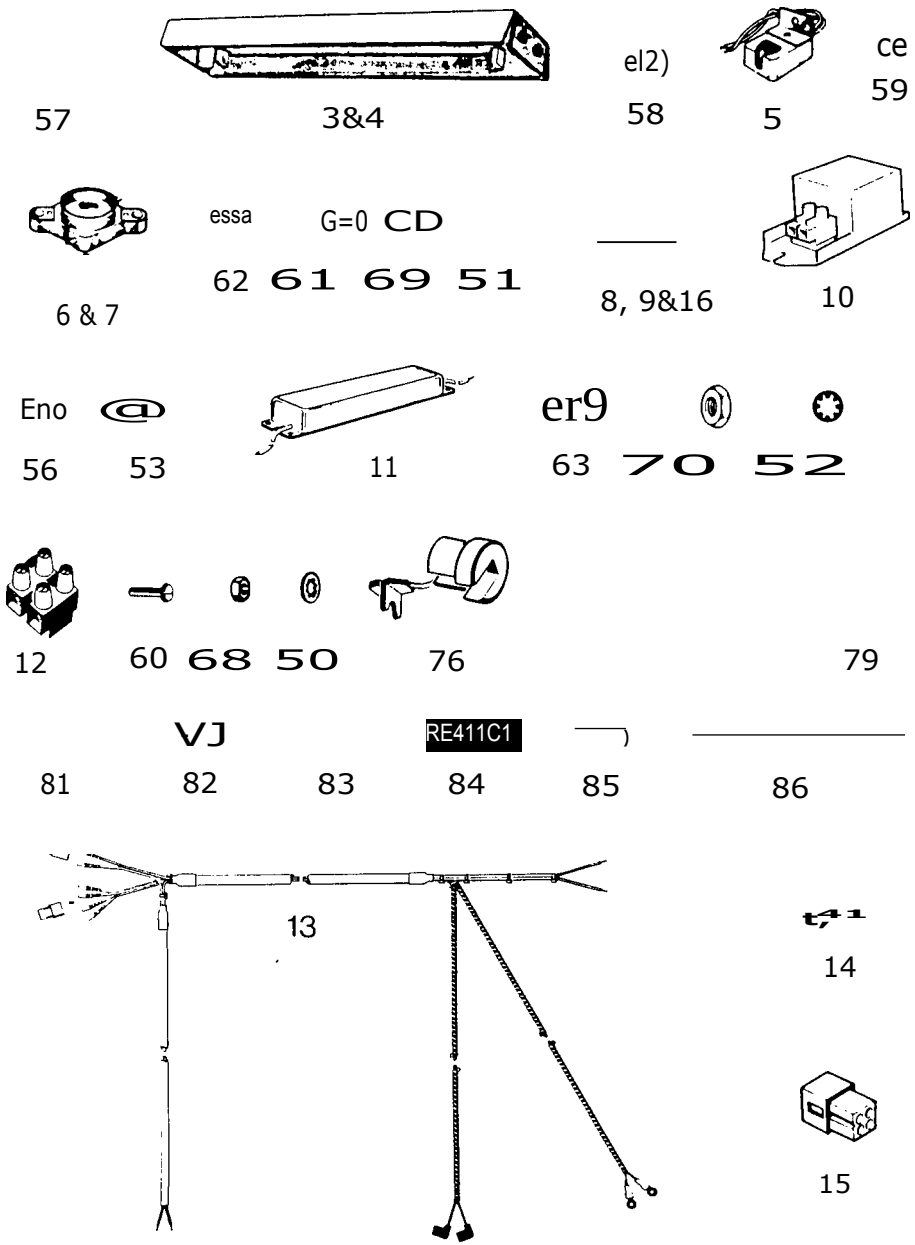

Index No.	Part No.	Equal to	Part	Serial No.
3	EI0A388		L.gnt Unit (HV)	
4	EI0A390		Light Unit (LV and CSA)	
5	FI4P032	ZA172,642C-3	Tube Holder for 3 and 4	
6	FI4P033		Starter Holder for 4	
7	FI4P034		Starter Holder for 3	
8	FI4P035	ZA 164,644C-3	Starter for 3'	
9	FI4P036	1021WT	Starter for **4**	
10	FI4P037	655C-3	Choke for 3	
11	FI4P038	ZA152,1055WT	Choke for 4	
12	FI4P039	3S424E,1003WT	Block - 2 way for 3 and 4	
13	EI4R222		Harness R.H. for 3,4,E14R263 and FI4A008	
14	FI4W008		2 Pin Connector for 13	
15	FI4P040		Connector - 4 way for 13	
50	LOCR140 (25) CR140		Washer for 68	
51	LOCR007 (25) CR7		Washer for 69	
52	LOCR110 (25) CR110		Washer for 70	
53	LOCR153 (10) CR153		Washer for 56	
56	LOHS177 (10) HS177		Screw for 10 10-24 UNC x 1/4 in	
57	LOHS169 (10) HS169		Fixing Screw 10-32 UNF for 3 and 4 (L.H.)	
58	LOOS008 (25) 058		Fixing Screw 10-32 UNF x 3/8 in for 3 and 4 (R.H.) Base Plate	
59	LOHS170 (25) HS170		Screw for 5 6-32 UNC x 3/16 in	
60	LODS019 (10) 0519		Screw for 12 4-40 UNC x 5/8 in	
61	LOCS171 (10) CS171		Screw for 7 6-32 UNC x 5/8 in	
62	LOHS057 (10) H557		Screw for 6 6-32 UNC x 5/16 in	
63	M14P008 (10)		Screw for 11 8-32 UNC x 1/4 in	
68	LOCT072 (10) C172		Nut for 60 4-40 UNC	
69	L001030 (10) 0730		Nut for 61 6-32 UNC	
70	LOOT005 (10) 015		Nut for 63 8-32 UNC	
76	M14P009 (4)		Bush for 3 and 4	
77	M14P010 (4)		Bush for 4	
78	M14P011 (4)		Bush for 4	
79	LOHW315 (4) HW315		Grommet for 3 and 4	
81	M14W022 (10)		Pin for 13	
82	LOHWO23 (10) HW23		Terminal for 13	
83	LOHWO25 (10) HW25		Boot for 13	
84	M14W016 (10)		Eyelet for 13	
85	M14W025 (10)		Sleeve for 13	
86	LOHW104 (10) HW104		Tie for 13	

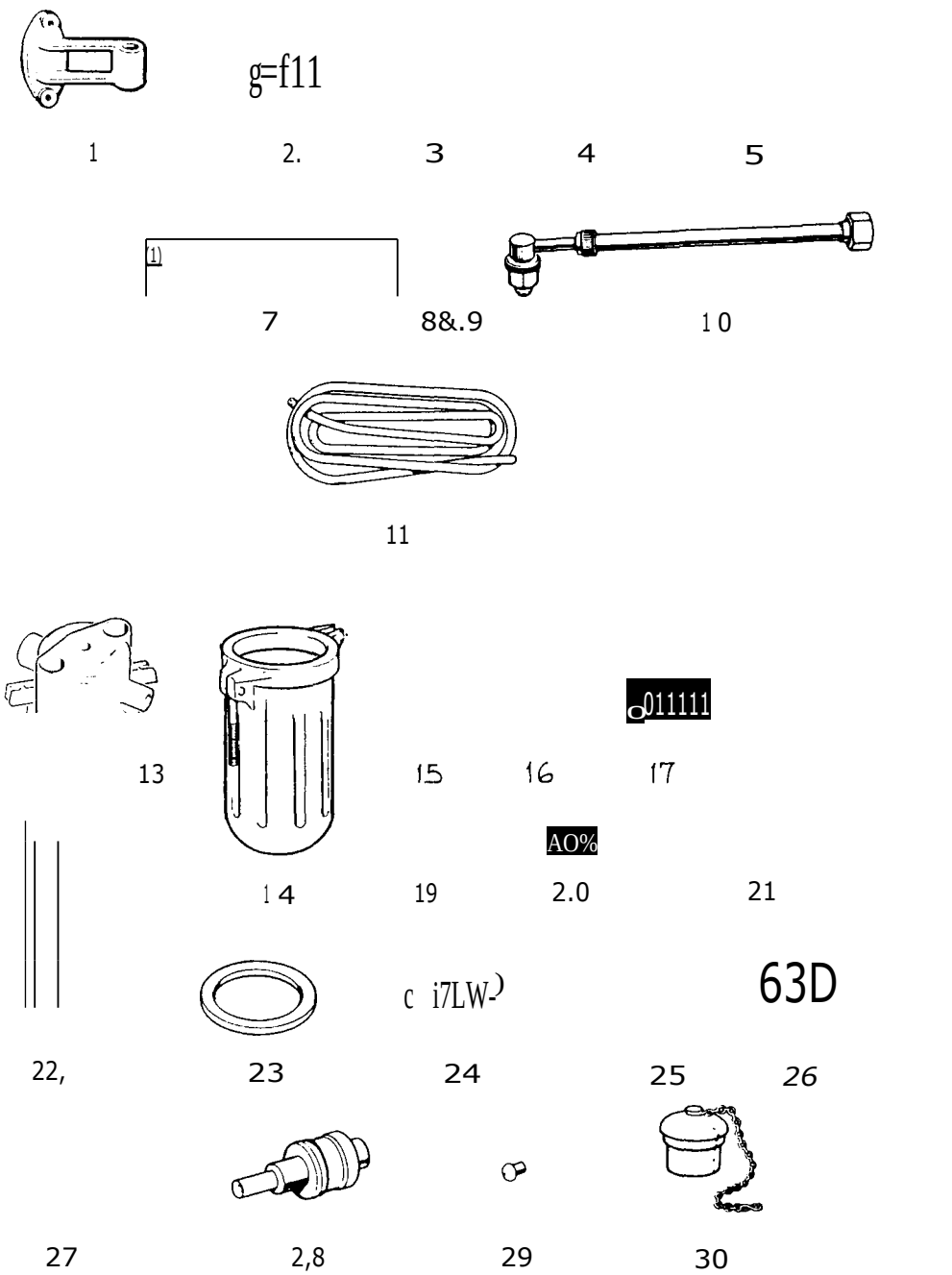

Index No.	Part No.	cgual to	Part	
1	F140066	10855/1	Bracket for 7	
2	F14B067	10855/13	Screw for 1	5/16 in BSF x 1 in
3	F14B068	10855/14	Washer for 3	
4	F140069	10855/15	Nut for 2	5/16 in BSF
5	F14B070	10855/7	Bracket for 7	
6	F148071	10855/16	Screw for 1 and 5	1/4 in x 1/8 in
7	F140072	4903/1/0	Pillar for 1 and 5	
8	F14B073	6366	Nozzle for 10	
9	F140074	5523	Nozzle (wide angle) for 10	
10	F140075	6839	Telescopic Arm - complete	
11	F140076	8225	Plastic Hose	
12	F14B077	12703	Spray Gun - complete (not shown)	
13	F148078	12703/1	Top Cover for 12	
14	F14B079	12703/19	Spray Gun Bowl	
15	F140080	11259/2	Body for 17	
16	F140081	4542	Washer for 15	
17	F14B082	11259/4	Intake Connector	
18	F140083	10027/38	Washer for 17	
19	F140084	12639/14	Dial	
20	F14B062	9037	Spring for 24	
21	F140086	12703/16	Knob for 24	
22	F140087	12703/13	Air Tube Assembly	
23	F1413088	12703/2	Sealing Ring for 13	
24	F148089	12703/12	Valve Spindle	
25	F140090	12703/11	Bush for 24	
26	F14B091	12703/8	Stud Nipple for 22	
27	F140092	6285	Knurled Nut for 14	
28	F14B093	12703/3	Outlet Connector for 13	
29	F148094	12738	Screw for 30	2 BA x 1/4 in
30	F14B095	6363	Plug Assembly for 13	

Serial No.

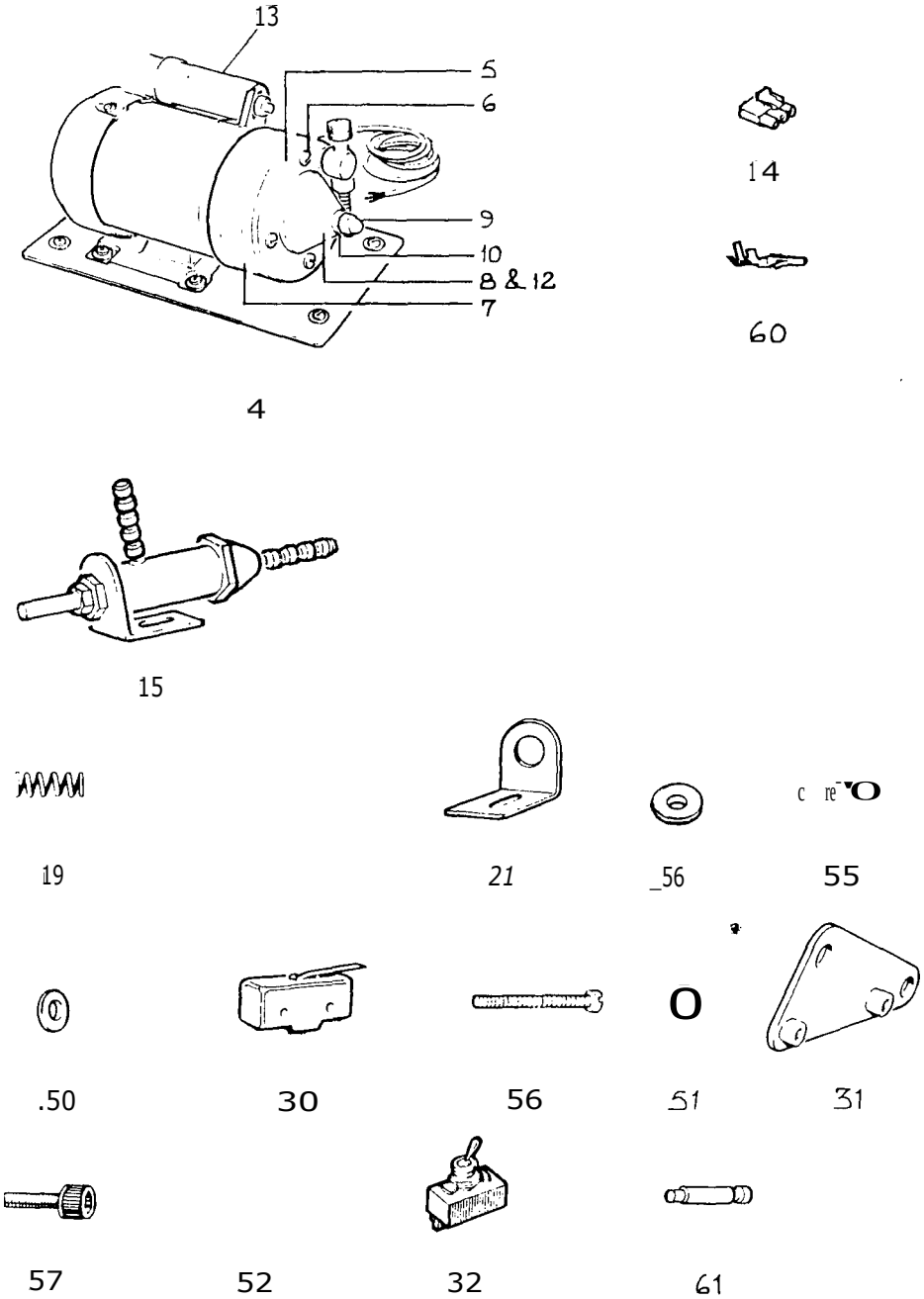

Index No.	Part No.	Equal to	Part	
1	EIOU005		Anti-Set-Off Spray 220/240V **50** Hz (not shown)	
2	EIOU006		Anti-Set-Off Spray 115V 60 Hz (not shown)	
3	E10U007		Anti-Set-Off Spray 110V 50 Hz (not shown) •	
4	F14B048	15001	Compressor - complete (state voltage and frequency when ordering)	
5	F146049	15001/2	Pump End Plate	
6	F146050	15001/1	Screw	
7	F14B051	15002	Vane	
8	F14B052	15005	Inlet Filter	
9	F14B053	15005/1	Lock Nut	
10	F148054	15005/2 --	Washer	
11	F148055	15005/3	Rubber Washer	
12	F14B056	15005/4	Filter Cover	
13	F14B057	15006	Capacitor	
14	F14E026	•	Plug for 4	
60	M14W022 (10)		Pin for 4	
			Air Control Valve	
15	F148058	10855/17	Air Control Valve complete	
16	F14B059	10876/22	Nut for 15	
17	F14B060	10876/2	End Cap for 15	
18	F14B061	10876/4	Valve Seal for 15	
19	F146062	9037	Spring for 18	
20	F14B063	11753/1	Piston for 15	
21	F14B064	10855/8	Bracket for 15	
22	**F14B065**	1976	Lock Nut for 21	
50	LOCR153 (10)	CRI53,0R21	Washer for 55	
55	**L005352 (10)**	C5352	Screw for 21	10-24 uric x **3/8** in
			Microswitch	
30	F14B045	3650	Microswitch	
31	E103015	3640	Bracket for 1	
32	F14B046	1025WT	Toggle Switch	
51	LOCR064 (10)	CR64,CRI54	Washer for 56	
52	L00R153 (10)	0R21,CR153	Washer for 57	
56	LOCS418 (25)	CS418	Screw for 1	6-32 UNC x **1** in
57	L005009 (25)	0S9	Screw for 2	10-32 UNF x 1/2 in
61	L0CW778 (**5)**	CW778	Spring Peg for Item 5-D1	

Serial No.

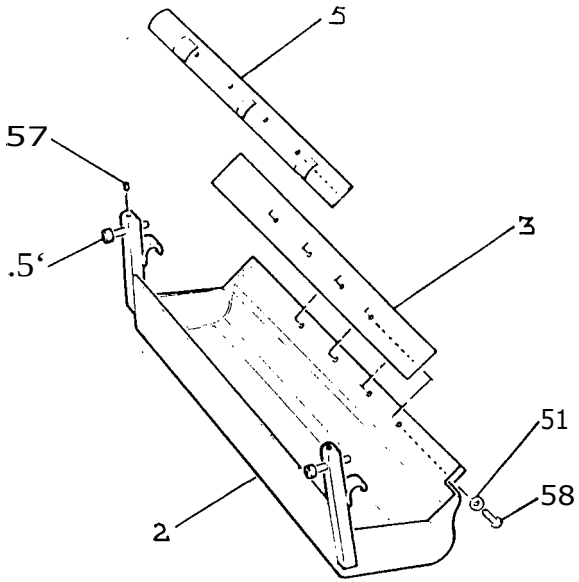

=05

7

55

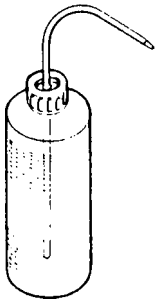

451 1

64

50

Index No.	Part No.	Equal to	Part
1	E108037		Ink :,oller Cleaning Attachment - complete with 1-8,50,55-58 and 63 (not shown)
2	F14B096	602V-3	Trough
1	F148097	610V-3	Cleaning Blade
4	F148098	611V-3	Clamp Strip
5	E10B038		Clamp Bar
6	E10B024	91013024F99	Operating Lever - L.H.
7	E10B022	901B022P99	Operating Lever - R.H.
8	F14B099	609V	Squeegee Bottle
50	M143016 (4)	211870016P	Washer for 55
51	M14B002 (10)		Washer for 58
55	PIOB010 (4)	910B010029	Screw for 6 and 7
56	L00S036 (10)	0S36	Screw for 2 1/4 in-20 UNC x 1 in
57	M14B001 (10)		Screw for 56 2 BA x 5/16 in
58	L005368 (10)	C5368	Screw for 2 and 5
63	L0CW562 (10)	CW562	Stop Pin for 6 and 7

Serial N

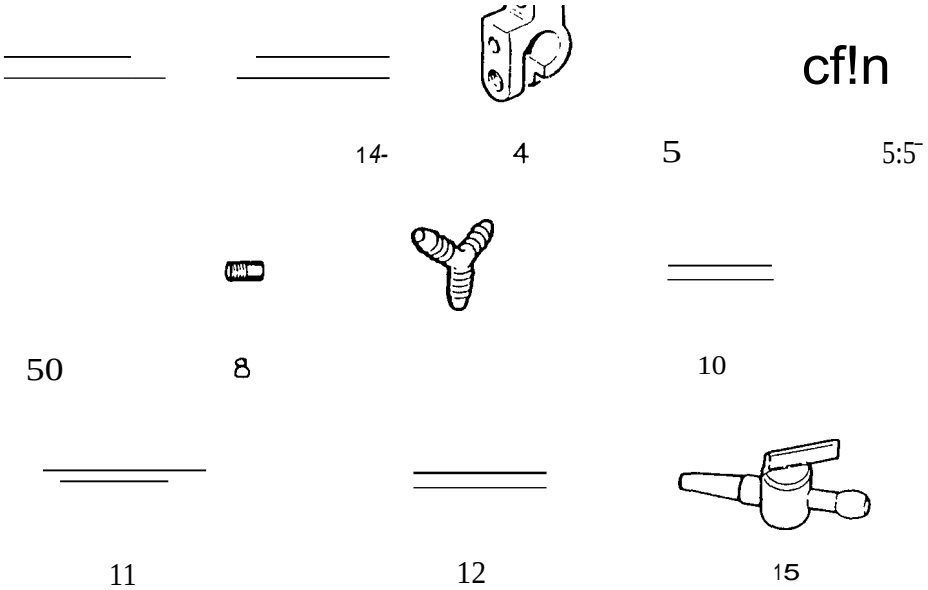

Index No.	Part No.	Equal to	Part
1	E14E173		4 Sucker System - complete with 2-13
2	F14G014	20G	Sucker - L.H.
3	F14G015	21G	Sucker - R.H.
4	E14E143		Removable Holder for 2 and 3
5	[14E158		Screw for 4
6	E14E130	229G	Sucker for 2 and 3
8	F14H002	2H	Air Pipe Connector for Vacuum Manifold Shaft
9	F14H301		Y-Hose Connector
10	E14E154		First Outer Sucker Hose
11	E14E155		Second Outer Sucker Hose
12	E14E156		Distributor Sucker Hose
13	F14H305		Syphon Tap 1/4 in
50	P14E157	(5)	Pin for 4

Serial No.

C5

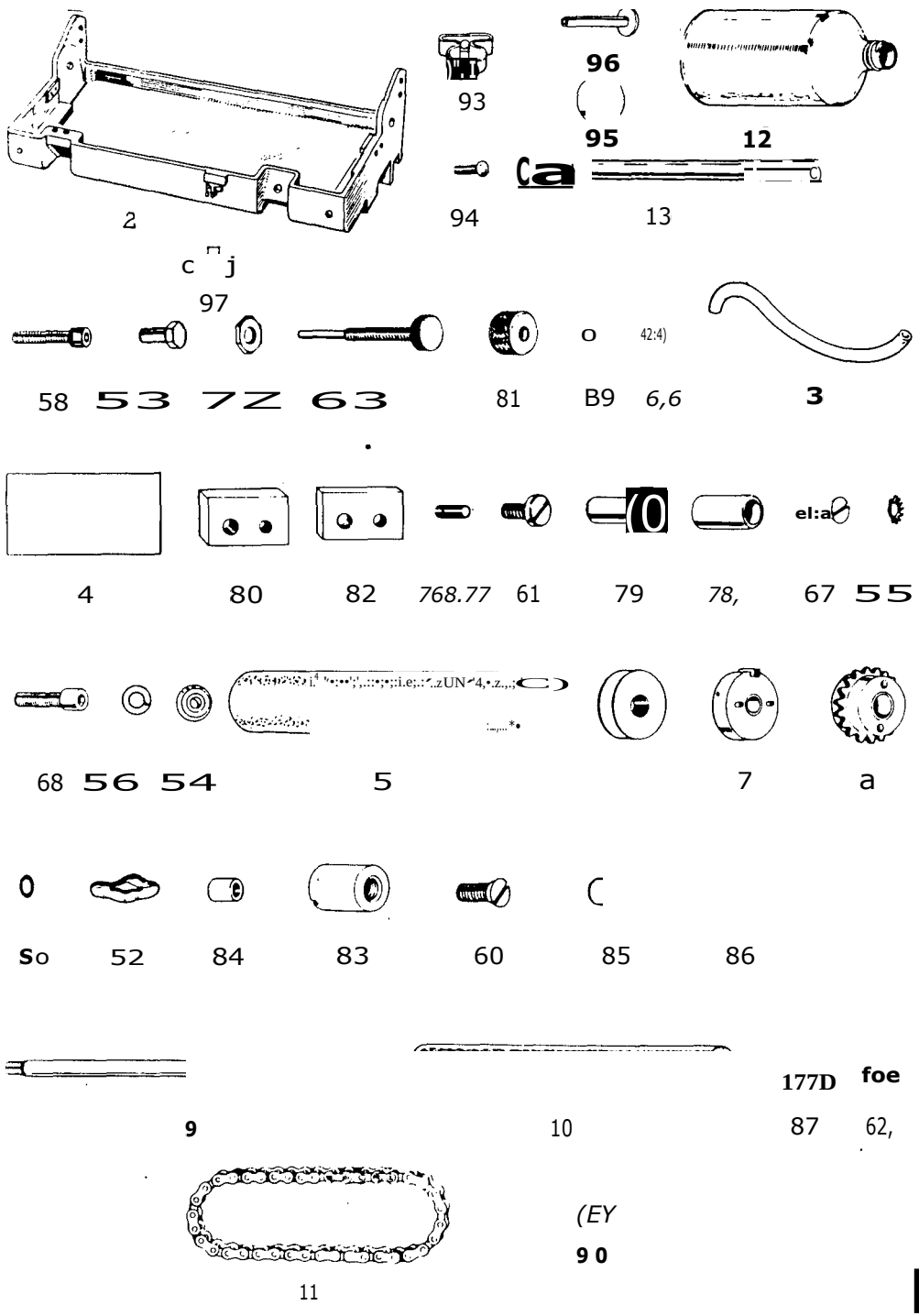

lodex No.	Part No.	Equal to	Part
1	E10H017		Blanket Cleaning Attachment (not shown)
2	E10H012		Trough
3	E10F039	910F039Y99	Hose
4	E05E253		Label
5	F14N308	624N-3	Cleaning Roller - 'Sponge
6	E10F078	625N	Hub - L.H. for 5
7	F14N311	626N-3	Hub - R.H. for 5
8	E10F060	630N	Sprocket for 5
9	F14N309	641N-3	Shaft for 5
10	F14N310	634N-3	Wiper Roller - complete with 62 and 87
11	F14N021	682N	Chain (39 links) for 8
12	F148099	609V	Bottle for 2
13	F14N036	603N	Tube for 2

St414d No

El

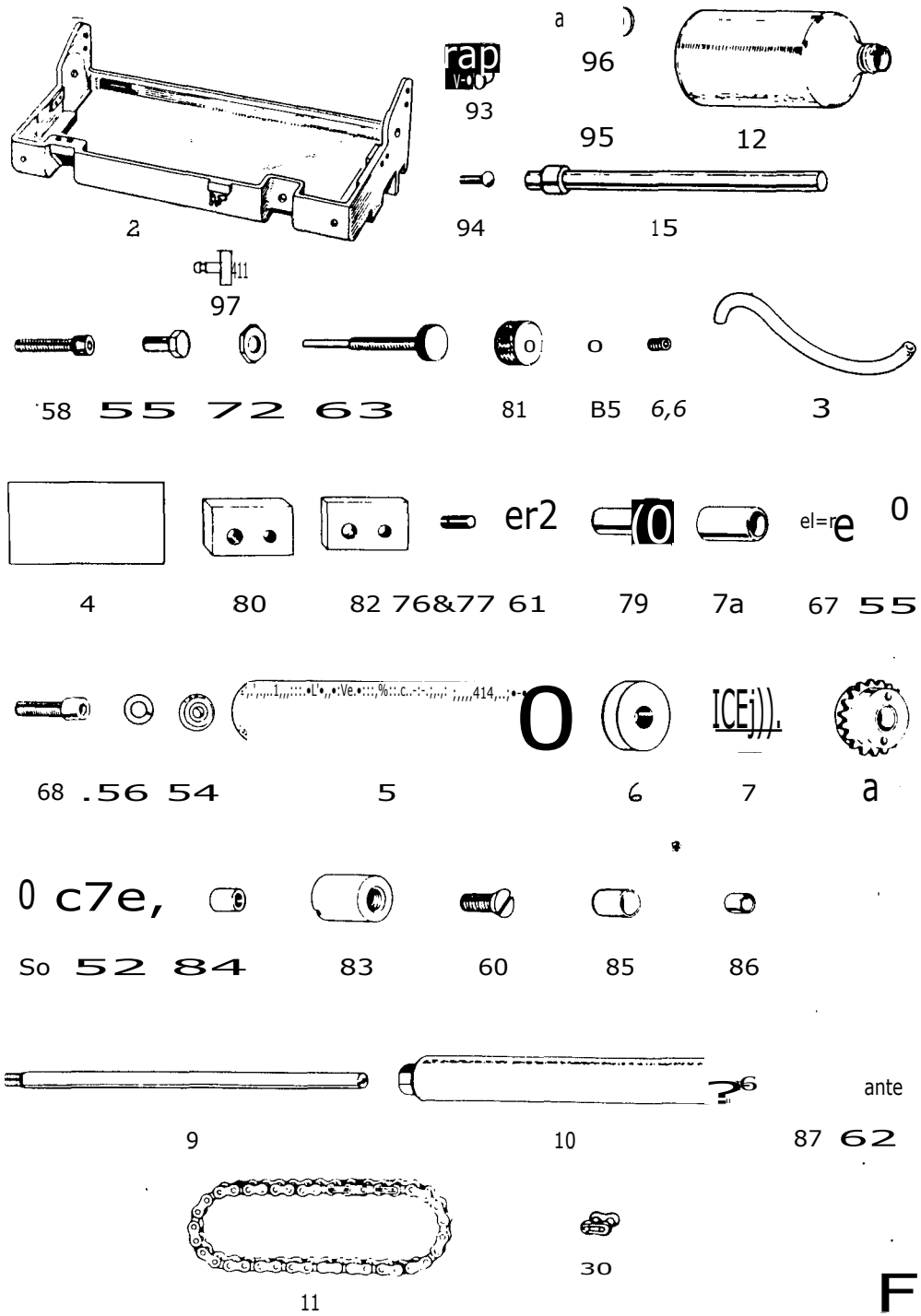

Indc x No.	Part No.	Equal to	Part	Serial ;to.
50	LOCR039 (25)	CR39	Shirr. +Jasher 25/64 in I.D. x 5/8 in 0.0.	
52	LOHR049 (10)	HR49	Wave Washer for 17	
54	LOCR009 (10)	CR9	Washer for 68	
55	LOCR128 (25)	CR128	Lock Washer for 67	
56	LOCR134 (25)	CR134	Spring Washer for 68	
58	L00S018 (25)	0S18	Screw for 1 10-24 UNC x 7/8 in	
59	M14N003 (10)		Screw for 1 1/4 in-20 UNC x 3/4 in	
60	L05C362 (10)	CS362	Screw for 83 5/16 in-18 UNC x 1/2 in	
61	L0CS379 (10)	CS379	Screw for 80 8-32 UNC x 5/16 in and 82	
62	LOCS380 (10)	CS380	Screw for 87 6-32 UNC x 5/16 in	
63	LOCS400 (2)	CS400	Adjusting Screw for 1	
66	L005386 (10)	CS386	Screw for 81 10-32 UNC x 1/8 in	
67	LOCS361 (10)	CS361	Screw for 1 1/2 in-20 UNC x 5/8 in	
68	L005035 (10)	0S35	Screw for 1 1/4 in-20 UNC x $^{7}/_{8}$ in	
72	LOOT008 (25)	0T8	Nut for 59 1/4 in-20 UNC	
76	LOCW405 (25)	CW405	Spring Dowel 1/8 in dia. x 3/4 in for 80	
77	L0CW445 (25)	CW445	Spring Dowel 1/8 in die. x 1/4 in for 80 and 82	
78	LOCW705 (5)	CW705	Bearing for 79	
79	LOCW706 (5)	CW706	Pivot Stud	
80	LOCW710 (5)	CW710	Side Plate - L.H.	
81	LOCW711 (5)	CW711	Locking Collar for 63	
82	LOCW712 (5)	CW712	Side Plate - R.H.	
83	LOCW714 (5)	CW714	Stud for 8	
84	LOCW716 (4)	CW716	Spacer for 5	
85	LOHWO39 (5)	HW39	Bearing for 8	
86	L0CW726 (5)	CW726	Bearing for 6 and 7	
87	L00W182 (10)	0W182	Bearing for 10	
88	LOCW834 (5)	CW834	Spacer for 9	
89	LOHWO57 (50)	HW57	Nylon Plug for 81	
90	LOCW704 (5)	CW704	Link for 11	
93	LOCW718 (5)	CW718	Clip for 3	
94	LOCW719 (25)	CW719	Rivet for 93	

F?

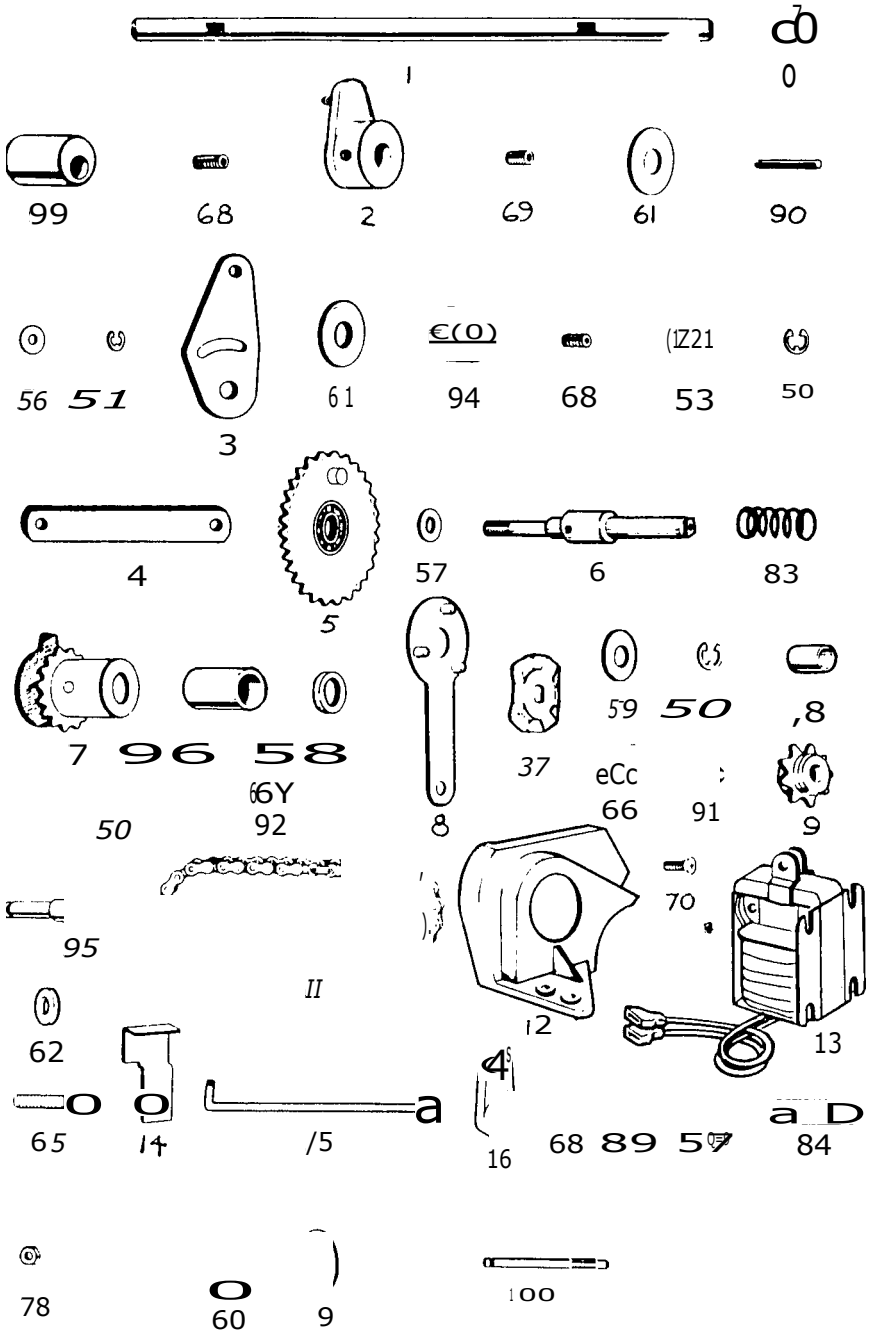

FR

BLANKET CLEANING ATTACHMENTS

E3

Index No.	Part No.	Equal to	Part
1	E10H015		Operating Shaft
2	F14N022	656N	Operating Arm
3	F14N023	660N	Operating Plate
4	F14N024	664N	Connecting Link for 3 and 8
5	F14N025	666N	Drive Sprocket
6	F14N026	667N	Spindle for 5
7	Fl4N027	669N	Clutch Cam Sprocket
8	Fl4N028		Operating Arm
9	F14N029	679N	Idler Sprocket - complete with 98
11	F14N030	683N	Chain (63 Links)
12	F14N031	685N	Chain Guard
13	E14R195		Solenoid 23/25V 50/60 Hz
14	E10F100		Stop for 13
15	E10F097		Link for 13
16	E10F099		Arm for 1 and 15
19	E14A065		Blanking Disc

Serial Nu

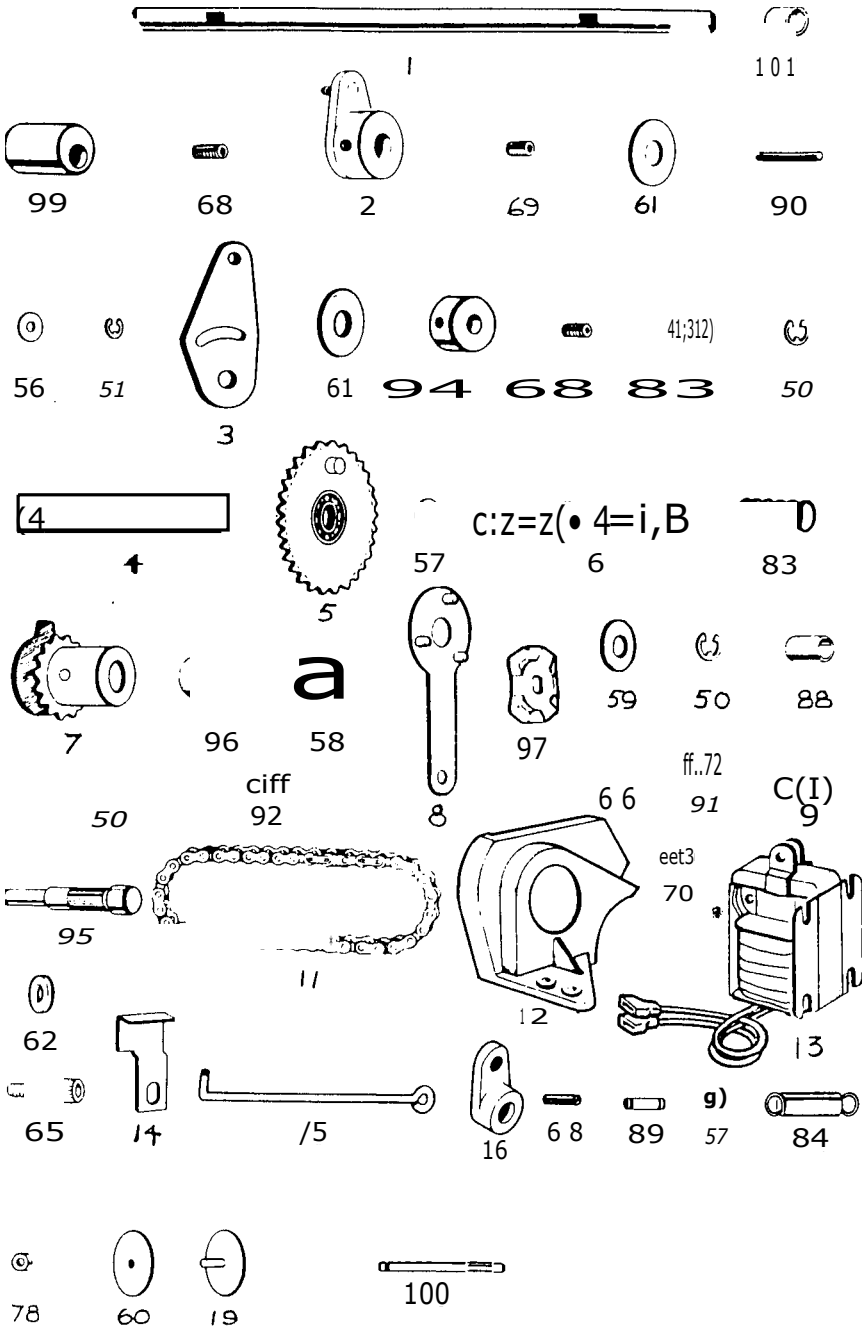

BLANKET CLEANING ATTACHMENTS

E4

Index No.	Part No.	Equal to	Part
50	LOCP002 (25)	CP2	Spring Clip for 91,93 and 95
51	LOCP009 (25)	CP9	Spring Clip for 15,56 and 100
56	LOCR 121 (10)	CR121	Washer for 2
57	LOCR122 (10)	CR122	Packing Washer for 5
58	M14N009 (10)		Thrust Washer for 7
59	LOCR125 (10)	CR125	Washer for 97
60	LO2A086 (10)		Washer for 78
61	LOCR 147 (10)	CR147	Washer for 2 and 3
62	LOCR 153 (10)	CR153,0R21	Washer for 65
65	LOOS009 (25)	0S9 ___	Screw for 13 10-32 UNF x 1/2 in
66	LOOS008 (25)	0S8	Screw for 6 10-32 UNF x 3/8 in and 97
68	M14N006 (10)		Screw for 16 10-32 UNF x 5/16 in and 99
69	M14N002 (25)		Screw for 2 10-32 UNF x 1/4 in and 94
70	L0CS363 (10)	C5363	Screw for 12 10-24 UNC x 1/2 in
79	LOCT072 (10)	C172	Nut for 19 4-40 UNC
83	L0CU237 (5)	CU237	Spring for 6
84	L04A141 (10)		Spring for 13
89	L03S223 (5)		Peg for 13
90	LOCW 444 (25)	CW444	Spring Dowel 3/32 in die. x 7/8 in for 2 and 16
91	LOCW703 (10)	CW703	Link Pin for 4 and
92	LOCW 704 (5)	CW704	Connecting Link for 11
93	LOCW708 (10)	CW708	Link Pin for 3 and 4
94	LOCW 709 (5)	CW709	Collar for 3
95	LOCW 715 (10)	CW715	Stud for 9
96	LOCW 717 (5)	CW717	Bearing for 7
97	LOCW 720 (5)	CW720	Clutch Cam Plate
98	LOCW 725 (10)	CW725	Bearing for 9
99	LOCW 724 (4)	CW724	Eccentric for 1
100	L03W079 (2)		Spring Peg for 84
101	M143017 (10)	231110536P	Bearing for 1 and R.H. Printer Side Frame

Serial Nc

.:

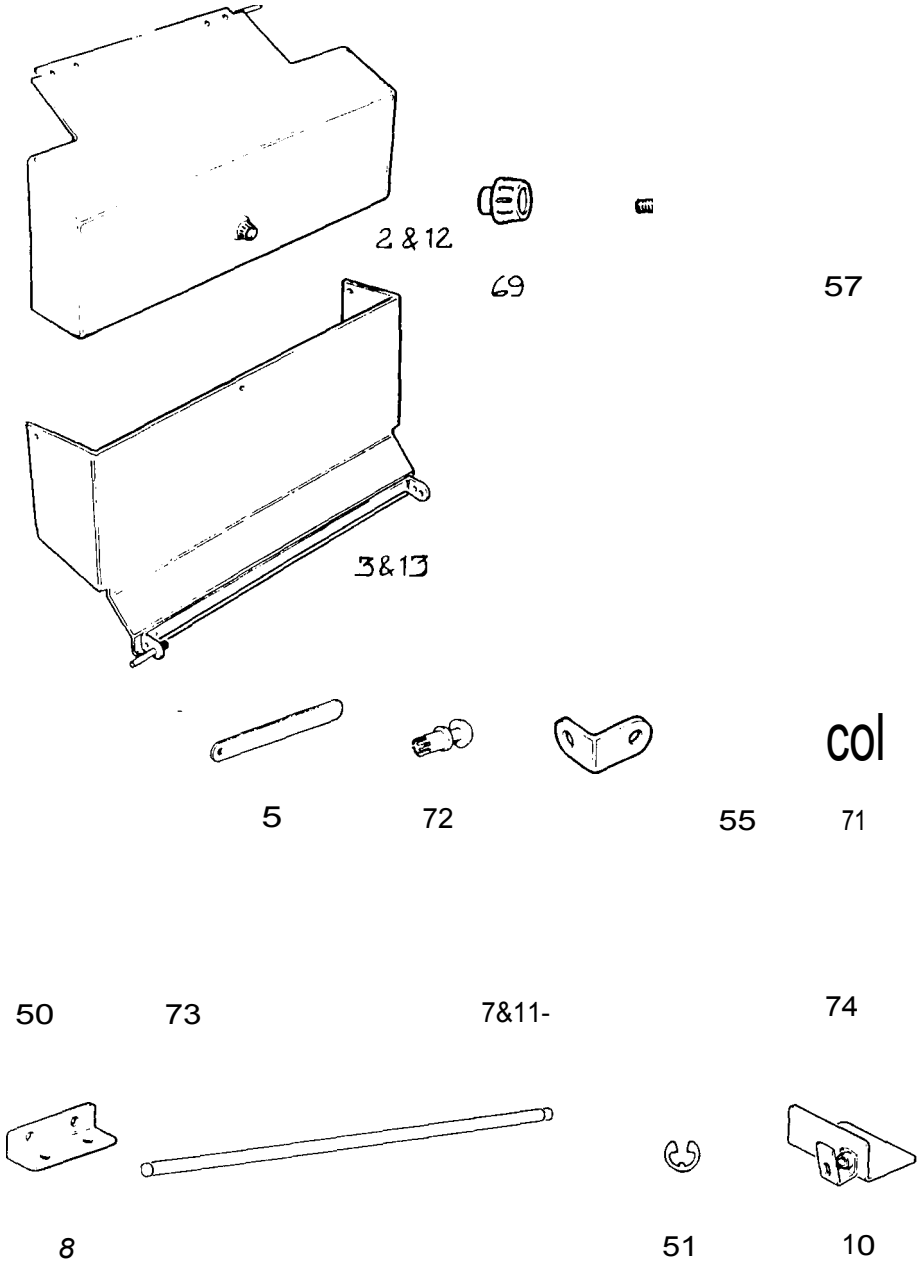

Index No.	Part No.		Equal to	Part	
1	E10M031			Manual Plate Loader Platform - complete (not shown)	
2	E14N233			Printer Guard Upper - complete with 57, 62 and 69	
3	E14N235			Printer Guard Lower - complete with 4,56,57,63,64 and 70	
4	E14N059			Pivot Plate for 3	
5	E14N227			Plate Support	
6	E14N228			Bracket for 5 and 7	
7	E14N232			Platform	
8	E14N230			Bracket for 9	
9	E14N226			Shaft for 10	
10	E14N231			Plate Guide	
50	LOLP003	(25)	LP3	Spring Clip for 71	
51	LOLP004	(25)	LP4	Spring Clip for 9	
55	LOCR058	(25)	CR58	Washer (Nylon) for 71	
56	LOCR145	(25)	CR145	Washer for 63	
57	LOCR017	(25)	CR17	Washer for 62 and 64	
62	M14A012	(10)		Screw for 69	M5 x 12mm
63	LOCS419	(25)	C5419	Screw for 4	6-32 UNC x 1/4 in
64	LOOS013	(10)	0S13	Screw for 3	10-32 UNF x 1 in
69	P14N202	(4)		Knob for 2	
70	L02N125	(5)		Bush for 3	
71	L035267	(10)		Stud for 5 and 6	
72	M14A013	(10)	211761056P	Rivet for 3 and 6	7.5mm
73	M148003	(10)		Stop Rivet for 5	6.5mm
74	M148004	(10)		Rivet for 6,7 and 8	8.5mm

Serial

FI

-otk

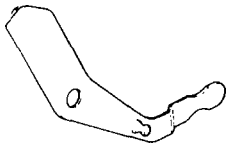

62 7 55

_50 2 63 76

3 64 4- 5 C9

a

5 -57 7(

F2

Index No.	Part No.	Equal to	Part	
1	F14B339	517P	Cylinder Check Lever	
2	F148340	521P	Latch for 1	
3	E14B109		Gear Guard	
4	E14R206		Plate for 5	
5	F14A010		Microswitch	
50	LOCP002 (25)	CP2	Spring Clip for 62	
55	LOCR005 (25)	CR5	Washer for 70	
56	LOLR022 (10)	LR22	Washer for 69	
57	LOLR008 (25)	LR8	Washer for 71	
62	LOHS200 (2)	HS200	Pivot Screw for 1	
63	L0CS392 (10)	C5392	Screw for 2	
64	LOCS341 (10)	C5341	Screw for 3	10-24 UNC x 1.1/4 in
69	M14M008 (10)		Nut for 4	8-32 UNC
70	LOCT060 (25)	CT60	Nut for 62	1/4-28 UNF
71	LOCT072. (10)	CT72	Nut for 5	4-40 UNC
76	LOCU013 (10)	CU13	Spring for 1 and 2	

Serial No.